atlantic

INSTALLATION

EN

Alfea Excellia S Duo

Split 2-service air/water heat pump

Outdoor unit

- WOYG100MQL ☐
- WOYG121MQL ☐
- WOYG140MQL ☐
- WOYK121MQL ☐
- WOYK140MQL ☐

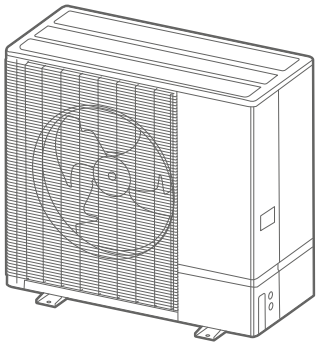

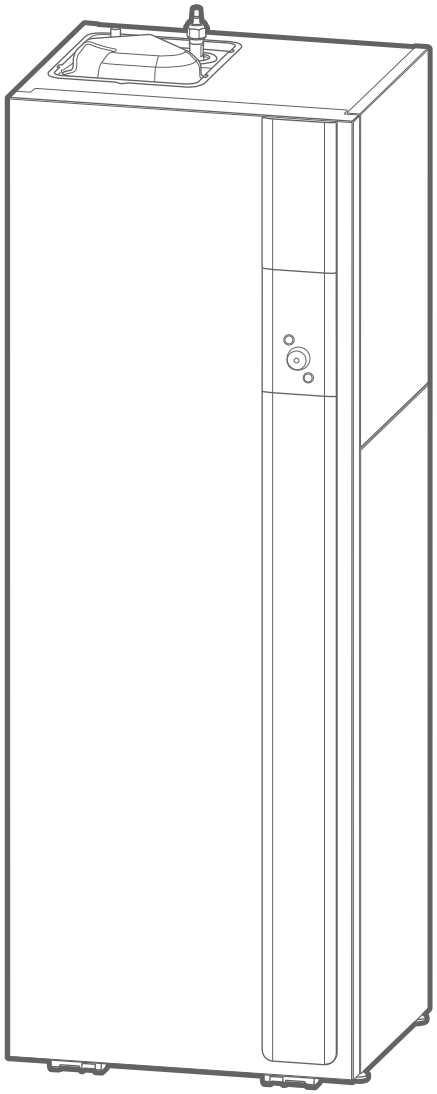

Hydraulic unit

- 024256 ☐
- 024257 ☐

U0786373_2536_EN_7
06/02/2026

For professionals.
The user should keep this manual for future reference

■ **Regulatory installation and maintenance conditions**

Appliance installation and maintenance must be carried out by an authorised professional in accordance with applicable regulatory texts and rules including:

- **Do not use any means to speed up defrosting or to clean, other than those recommended by the manufacturer.**
- **The appliance must be stored in a room with no permanent sources of ignition (for example: naked flames, operating gas appliance or electric radiator).**
- **Do not pierce or burn.**
- **Be careful with refrigerants, which can be odourless.**

■ **Handling**

The outdoor unit must not be placed horizontal during transport.

Transporting it horizontally may damage the appliance due to the refrigerant moving and the compressor suspensions bending.

Any damage caused by horizontal transport shall not be covered by the warranty.

If required, the outdoor unit should only be tilted when handled by hand (to go through a doorway, in a flight of stairs). This must be done carefully and the appliance should immediately be returned to a vertical position.

■ **Implantation**

The heat pump should be installed in accordance with the requirements related to its location.

The heat pump is designed to be installed at an altitude not exceeding 2,000 m.

In accordance with standard IEC 60-335-2-40, the heat pump hydraulic unit and all refrigeration connections going through the inhabited area should be installed in rooms complying with the minimum surface area.

- **Caution: the hydraulic unit must not be installed in a draught.**

■ **Refrigerant**

The maximum R32 fluid load with supplements must not exceed 1.84 kg.

■ **Refrigeration circuit containment**

All refrigeration circuits should be protected from dust and humidity contamination. Should these pollutants go inside the refrigeration circuit, they may contribute to degraded heat pump reliability.

- **Make sure the refrigeration connections and circuits are effectively contained (on the hydraulic unit, the outdoor unit).**
- **In the event of later default and based on a valuation, the presence of humidity or foreign bodies in the compressor oil would automatically exclude the warranty.**

- Upon receipt, check that the refrigeration circuit fittings and plugs mounted on the hydraulic unit and outdoor unit are in place and secured (cannot be loosened by hand). If this is not case, lock them using a back-up wrench.
- Also check that the refrigeration connections are closed (with plastic plugs or pipe pressing and brazing). If the plugs need to be removed during work (to cut the pipes for instance), they should be placed back as soon as possible.

■ **Hydraulic connections**

The connection must comply with applicable rules and regulations.

Reminder: Carry out all sealing operations in accordance with applicable rules for plumbing works:

- Use suitable gaskets (fibre gasket, O-ring).
- Use Teflon or oakum sealant.
- Use sealing paste (synthetic depending on the cases).

Use glycol water if the minimum flow temperature set is below 10°C. If glycol water is used, the glycol quality must be checked annually. Only use mono propylene glycol. The recommended concentration is 30% minimum. **The use of mono ethylene glycol is prohibited.**

Reminder: A CB-type boiler disconnector to prevent the return of boiler water to the drinking water circuit is required by articles 16.7 and 16.8 of the French Departmental Sanitary Regulation Model.

- **In some installations, the presence of various metals may lead to corrosion; metal particles and mud appear in the hydraulic circuit.**
- **If such is the case, it is recommended to use a corrosion inhibitor as recommended by the manufacturer.**
- **Furthermore, you will need to make sure the treated water does not become aggressive.**

Place a safety group on the cold water inlet with a 7 to 10 bar maximum calibrated valve (in accordance with local regulations), connected to a sewer drain. Operate the safety group in accordance with manufacturer recommendations. The pressure limiter must be operated frequently in order to remove scale deposits and to check it is not stuck.

The domestic hot water tank must be supplied in cold water through a safety group. There must be no valve between the safety group and the tank.

Connect the safety valve outlet to the sewer. The exhaust connected to the pressure limiter must be installed in a frost-protected environment, in a continuous downward slope.

■ Electrical connections

Before any intervention, make sure <u>all power supplies</u> are disconnected.

• Power supply features

For installations with no neutral, a galvanic insulating transformer earthed on the secondary must be used.

Electrical connections must only be done once all other operations (fixing, assembly...) have been carried out.

Caution!

The contract with the energy supplier must not only cover the heat pump wattage but must also cover the wattage of all appliances which may be operating at the same time. If the wattage is too low, check the wattage in your contract with your energy supplier.

Never use a mains socket to power the heat pump.

It must be powered directly (with no external switch) using dedicated lines, protected at the electrical panel by dedicated bipolar circuit-breakers, type C for the outdoor unit, type C for the heating* and domestic water* electrical backups.

The electrical installation must imperatively be equipped with a 30 mA RCD.

This appliance operates with a voltage rating of 230 V or 400 V +/- 10%, 50 Hz.

In single-phase, the unit must be connected to a power supply with an impedance of 0.424 ohm or lower. Contact the electricity supplier if this is not the case.

Electrical connection general features

It is essential to conform to the phase-neutral polarity during electrical connection.

It is preferable to use solid wire for fixed installations, especially in the building sector.

Tighten the cables using cable glands to prevent any accidental disconnection of the connecting wires.

Earth connection and continuity of earthing are imperative.

The earth wire must be longer than the other wires.

• Cable glands

To ensure power cables (Low Voltage) and sensor cables (Very Low Voltage) are securely fixed, it is imperative to tighten the cable glands in accordance with the following recommendations:

Size of the cable gland (mm)	*Cable diameter (mm)*	*Tightening torque (locknut) (N.m)*	*Tightening torque cap nut (N.m)*
PG7	1 to 5	1.3	1
PG9	1.5 to 6	3.3	2.6
PG16	7 to 14	4.3	2.6
PG21	13 to 18	5	4

• Connection to the screw terminals

The use of lugs is prohibited.

- Always choose a wire in accordance with applicable standards (***NF C 15-100*** in particular).
- Strip the end of the wire over approx. 25 mm.
- Using round-nose pliers, form a hoop of the diameter of the terminal tightening screws.
- Tighten the terminal block screw very firmly on the hoop. Insufficient tightening may cause heating and lead to failure or even fire.

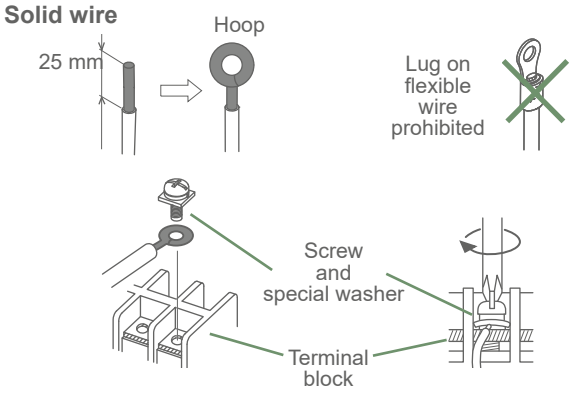

• Connection to the control boards

- Remove the corresponding connector and connect.

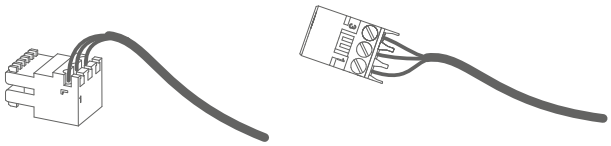

Pre-cabled bundle connector and/or screw connector

• Connection to the spring terminals

- Strip the end of the wire over approx. 12 mm.
- Push the spring with a screwdriver so the wire goes inside the cage.
- Insert the wire inside the dedicated hole.
- Remove the screwdriver and pull the wire to check it stays inside the cage.

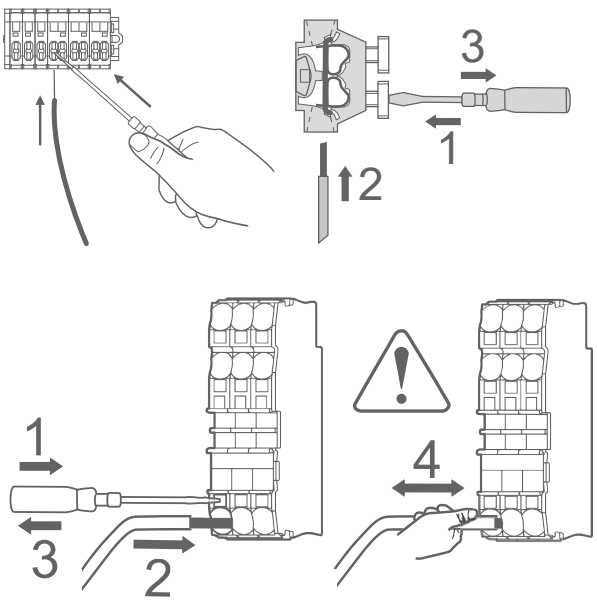

(* depending on option)

This appliance needs to be installed by a qualified professional with a refrigerant handling authorisation.

Table of contents

Introducing the equipment 6

Packing 6
Optional equipment 6
Definitions 6
Area of application. 6
Description 12
Working principle. 14

Implantation 16

Refrigeration connection fitting 16
Outdoor unit installation. 17
Installing the hydraulic unit 20

Refrigeration connections 25

Rules and precautions. 25
Refrigerant pipe shaping 25
Checks and connection 25
Filling the installation with gas. 29

Hydraulic connection 32

Heating circuit 32
Connection to the DHW circuit 33
Installation filling and purge. 33

Electrical connections 34

Hydraulic unit. 35
Outdoor unit. 38
Outdoor unit electrical connection 39
Options 40

Control system interface 42

User interface 42
Description of display 43

Flow setpoint 44

WITH a room thermostat 44
WITHOUT a room thermostat 44

Commissioning 45

Pre-commissioning checks 45
First commissioning. 45
Easy Start 45
Hydraulic unit purge 46

Control system menu 47

Menu organisation. 47
Active Functions 48
Domestic Hot Water 50
Heating 51
Heat Pump 51
Additional functions 53
Radio Network. 54
Diagnosis. 56

Failure diagnosis 60

Hydraulic unit errors 60
Outdoor unit errors 61
Circulation pump errors 61
Outdoor unit error codes 62

Maintenance 63

Hydraulic checks 63

Annexes 64

Filling with gas procedure 64
Basic hydraulic diagrams 66
Electric wiring diagram 68

Commissioning procedure 72

Commissioning check list 72
Commissioning technical sheet 74

Instructions for the user 75

Read the document compiling all precautions for use (Regulatory installation and maintenance conditions) before you start installing and/or using.

Symbols and definitions

HAZARD. Risk of significant injury for persons and/or risk of damage to the appliance. Always follow the warning.	Hazard: Electricity/Electrical shock
Important information to be remembered at all times.	Hazard: Low burn rate material
Tip/Advice	Read the installation manual
Bad practice	Read the user manual
	Read the instructions

Introducing the equipment

Packing

Package pairing table

Heat pump		Outdoor unit		Hydraulic unit	
Model	**Code**	**Reference**	**Code**	**Reference**	**Code**
Alfea Excellia S DUO 9	520398	WOYG100MQL	701297	Alfea Excellia Mono Duo	024256
Alfea Excellia S DUO 12	520399	WOYG121MQL	701298		
Alfea Excellia S DUO 14	520400	WOYG140MQL	701299		
Alfea Excellia S DUO 12 TRI	520401	WOYK121MQL	701300	Alfea Excellia Tri Duo	024257
Alfea Excellia S DUO 14 TRI	520402	WOYK140MQL	701301		

- **1 package:** Outdoor unit.
- **1 package:** Hydraulic unit

Accessories	
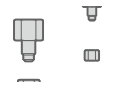	1/2"- 5/8" and/or 1/4"- 3/8" adapter 1/2" and/or 1/4" nut
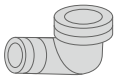	Elbow
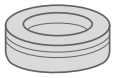	Plugs X 9
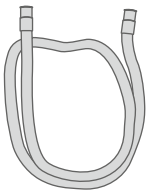	Drain pipe
	One contact gasket x2

Optional equipment

- **Room thermostat**
  Thermostat 105 (ref. 074511)
  Thermostat 225 (ref. 074912)
  Thermostat 228 (ref. 074913)
- **Outdoor temperature sensor** (ref. 074203)**.**
- **2-circuit kit** (ref. 520270 [074874 + 074872]) used to connect 2 heating circuits including the extension control board (ref. 074872)**.**
- **Extension control board kit** (ref. 074872) used for off -peak hour management, power limitation, smart grid...
- **Domestic hot water expansion vessel kit** (ref. 074877).
- **DHW recirculation kit** (ref. 074876).
- **Split Duo backup boiler kit** (ref. 074995)
- **High fl ow kit** (ref. 074994)
- **Kit for 2 decoupled circuits** (075097)
- **Rubber fl oor mounts (600 mm x2)** (ref. 809536)
- **Trace heating cable** (ref. 809644)
- **Condensate tray** (ref.074862)

Definitions

- Split: The heat pump includes two elements (an outdoor unit to be installed outdoors and a hydraulic unit to be installed inside the home).
- Air-to-water: The energy source is the outside air. This energy is transmitted to the water in the heating circuit by the heat pump.
- Inverter: The fan and compressor speeds are modulated according to heating requirements. This technology is used to save energy and operates either in single-phase or three-phase, whatever the heat pump wattage, to prevent high starting currents.
- COP (coefficient of performance): This is defined as the relationship between the energy transmitted to the heating circuit and the electric energy consumed.

Area of application

This heat pump can be used for:

- Heating in winter:

  Managing electrical backups for additional heating on the coldest days,

or

  Installation as a backup boiler for additional heating on the coldest days,

- Managing two heating circuits*,
- Producing domestic hot water.

(* depending on option)

General features

Model		9	12	14	12 Tri	14 Tri
Rated heating performances (Outside T° / Flow T°)						
Heating capacity						
+7°C / +35°C - Underfloor heating system / ceiling heating	kW	10.08	12.55	14.47	12.55	14.47
+7°C / +55°C - Radiator	kW	8.24	9.16	10.09	9.16	10.09
Power consumption						
+7°C / +35°C - Underfloor heating system / ceiling heating	kW	2.18	2.69	3.36	2.69	3.36
+7°C / +55°C - Radiator	kW	2.79	3.06	3.36	3.06	3.36
Coefficient of performance (COP)	**(+7°C / +35°C)**	**4.62**	**4.67**	**4.31**	**4.67**	**4.31**
Electric features						
Electrical voltage (50 Hz)	V	230			400	
Maximum appliance current	A	20.5	23	26	9.8	10.8
Maximum current of electrical heating backup	A	26.1			3 x 13	
Electrical heating backup wattage	kW	6 kW Single-phase			9 kW Three-phase	
Circulation pump actual power consumption	W	38				
DHW electrical backup wattage	W	1200				
Hydraulic circuit						
Maximum working pressure Heating / Hot water tank	MPa (bar)	0.3 (3) / 1 (10)				
Minimum hydraulic circuit flow	l/min	10				
Miscellaneous						
Outdoor unit weight	kg	96		102	96	102
Sound pressure level at 5 m [1] in accordance with EN 12102-1 (Outdoor unit)	dB (A)	34	34	36	34	36
Sound power level in accordance with EN 12102-1 [2] (Outdoor unit)	dB (A)	56	56	58	56	58
Hydraulic unit weight (tare/with water)	kg	135 / 342				
Weight content of Hydraulic unit / Hot water tank	l	24 / 190				
Sound power level in accordance with EN 12102-1 [2] (Hydraulic unit)	dB (A)	36				
Heating operating limits						
Min. / max. outdoor temperature	°C	-25 / +35				
Max. heating flow temperature underfloor heating system / ceiling heating	°C	45				
Max. heating flow temperature LT radiator	°C	60				
Refrigeration circuit						
Diameter of gas pipes	Inches	1/2				
Diameter of liquid pipes	Inches	1/4				
HFC R32 [3] refrigerant factory fill	g	1400		1630	1400	1630
Maximum working pressure	MPa (bar)	4.2 (42)				
Min. / max. length	m	5/25				
Max. drop	m	20				
Max. length without additional filling	m	15				
Mass of gas to be added per extra m	g	20				

[1] Hydraulic unit: Sound pressure level at (x) m of the appliance, 1.5 m from the ground, free field directivity 2 / Outdoor unit: Sound pressure level at (x) m of the appliance, at mid-length between the high point and the ground, free field directivity 2.

[2] The sound power level is a laboratory measure of the acoustic power released but unlike the sound level, it doesn't measure the perceived level.

[3] R32 refrigerant in accordance with standard NF EN 378.1.

[4] R32 refrigerant factory fill.

[5] Taking into account the potential additional filling with R32 refrigerant (view *"Additional filling", page 30*).

[6] The thermal and acoustic performances advertised are measured with a refrigerant connection length of 7.5 m.

■ Outdoor unit

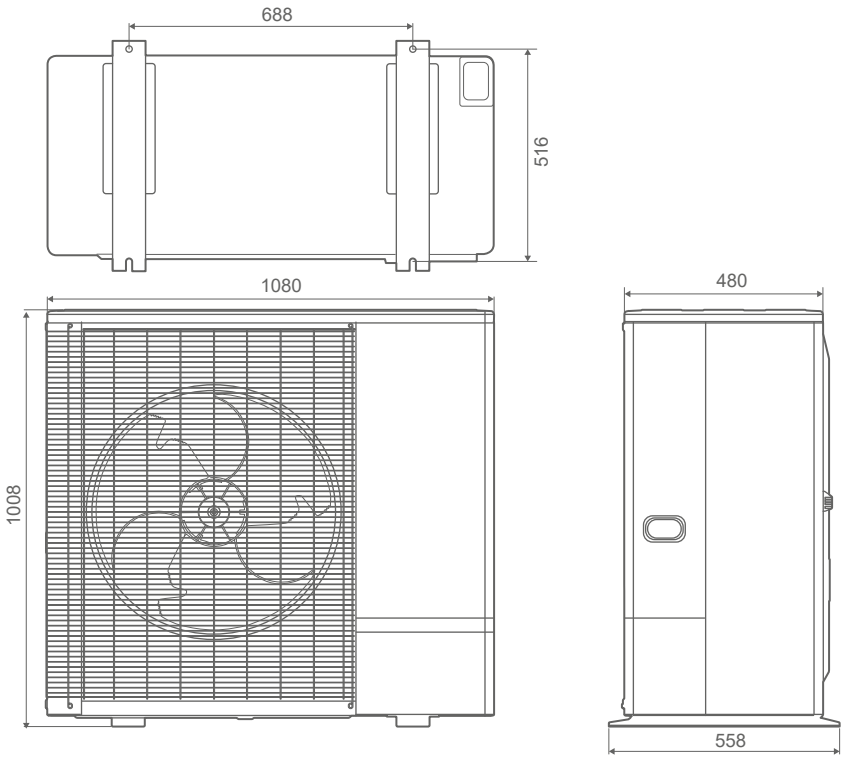

fig. 1 - Dimensions in mm

■ Hydraulic unit

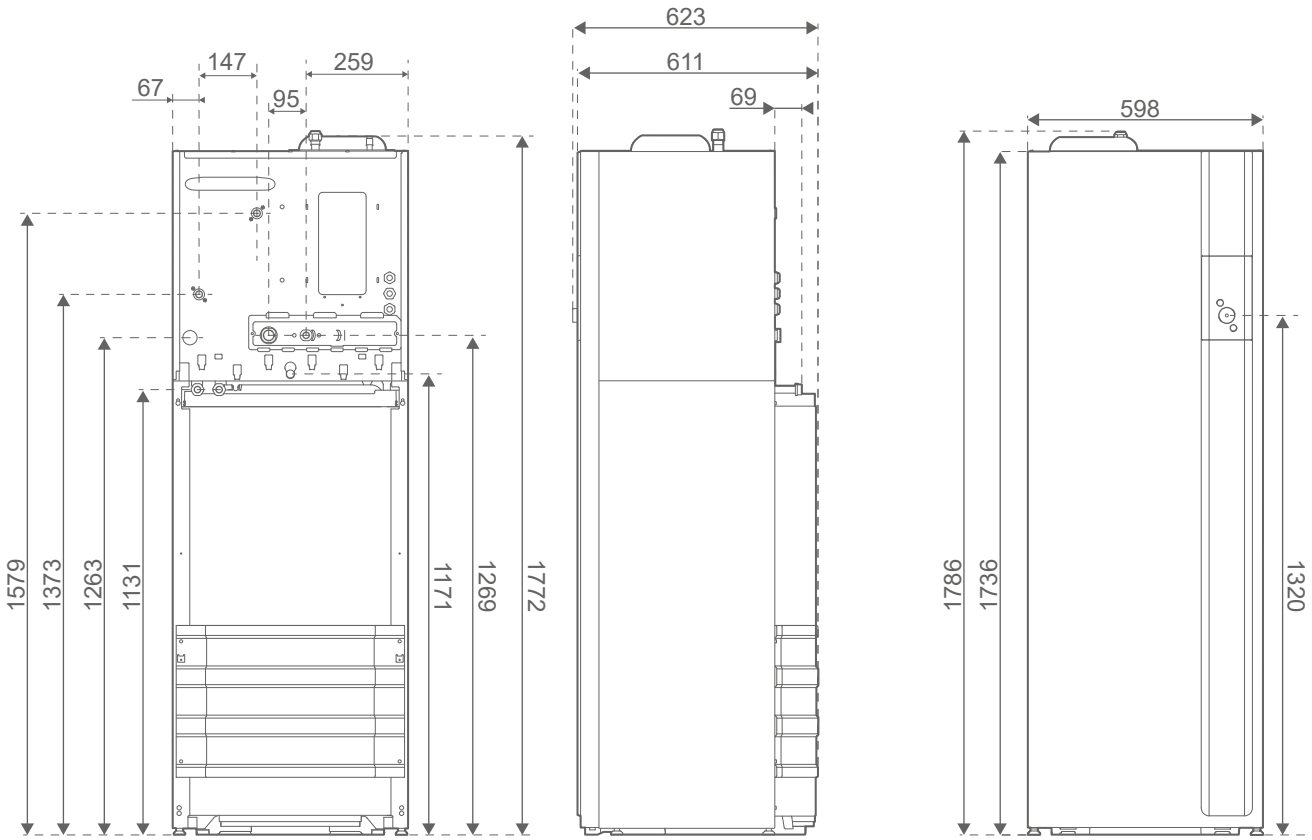

fig. 2 - Dimensions in mm

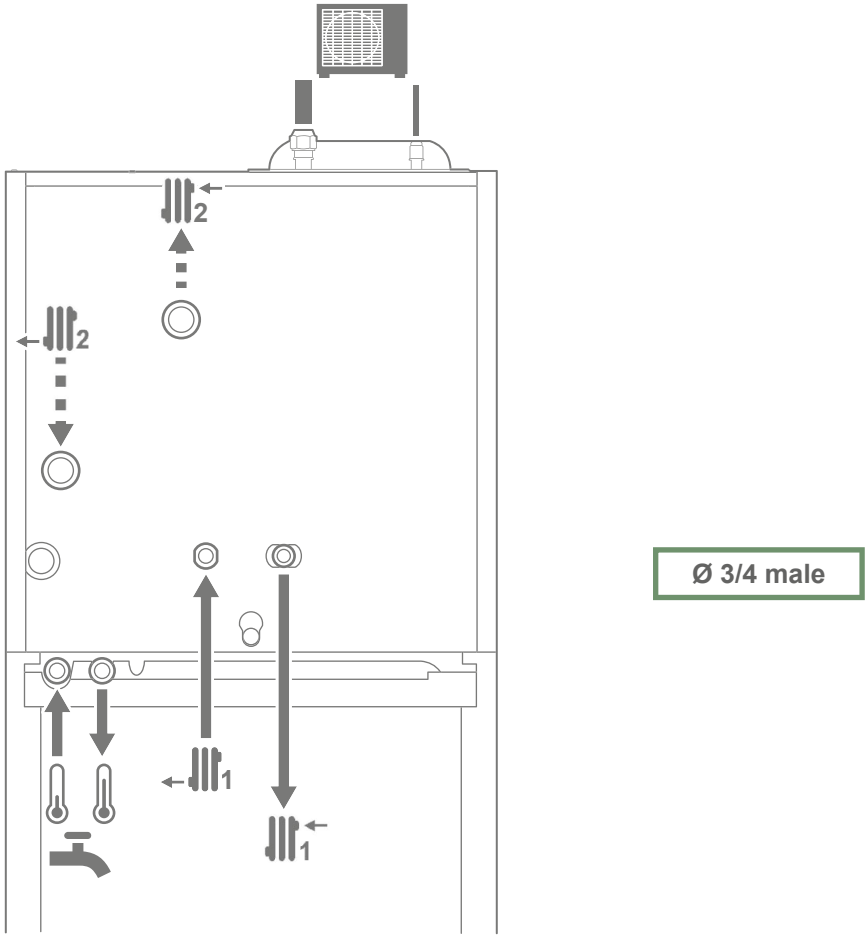

fig. 3 - Hydraulic connections

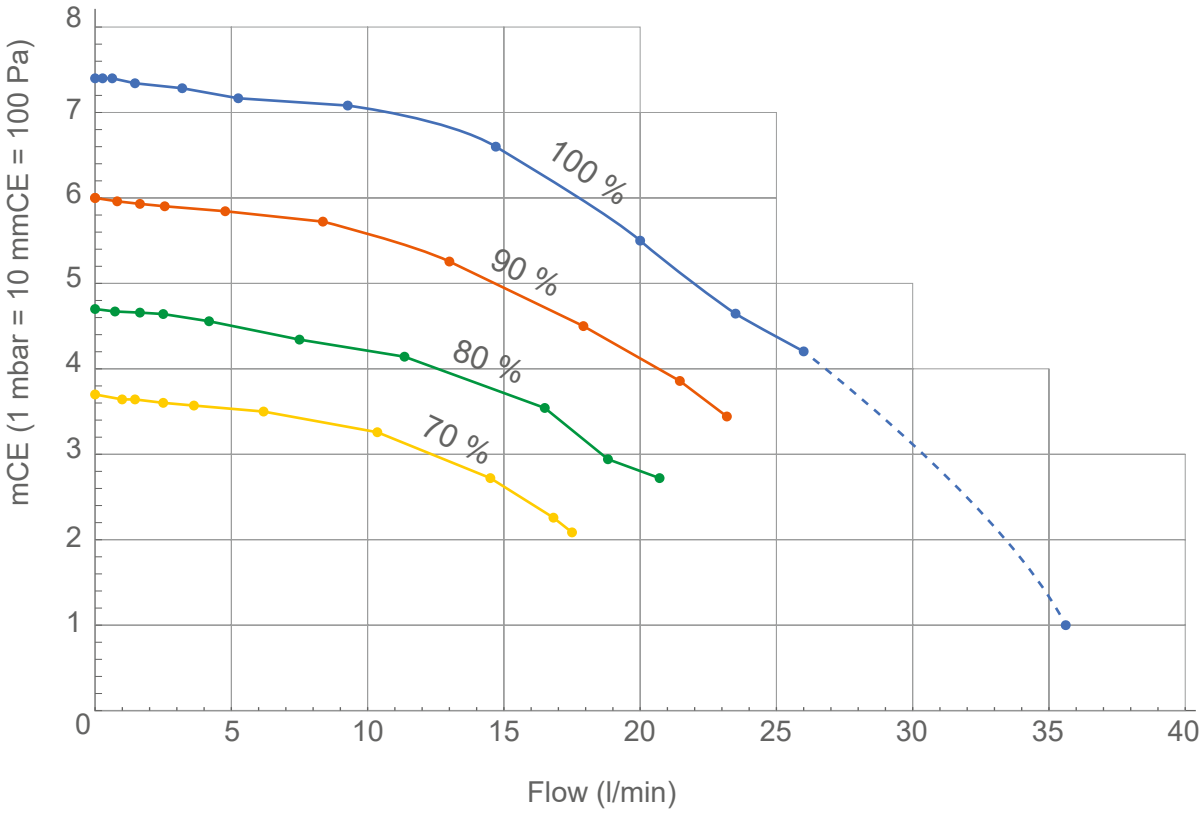

fig. 4 - Available hydraulic pressures and flows

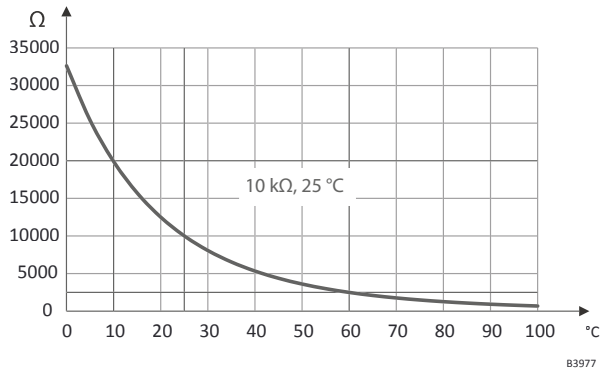

Heat pump return flow sensor.
Heat pump flow sensor.
Outside sensor QAC2030 NTC.

fig. 6 - Ohmic sensor values (Hydraulic unit)

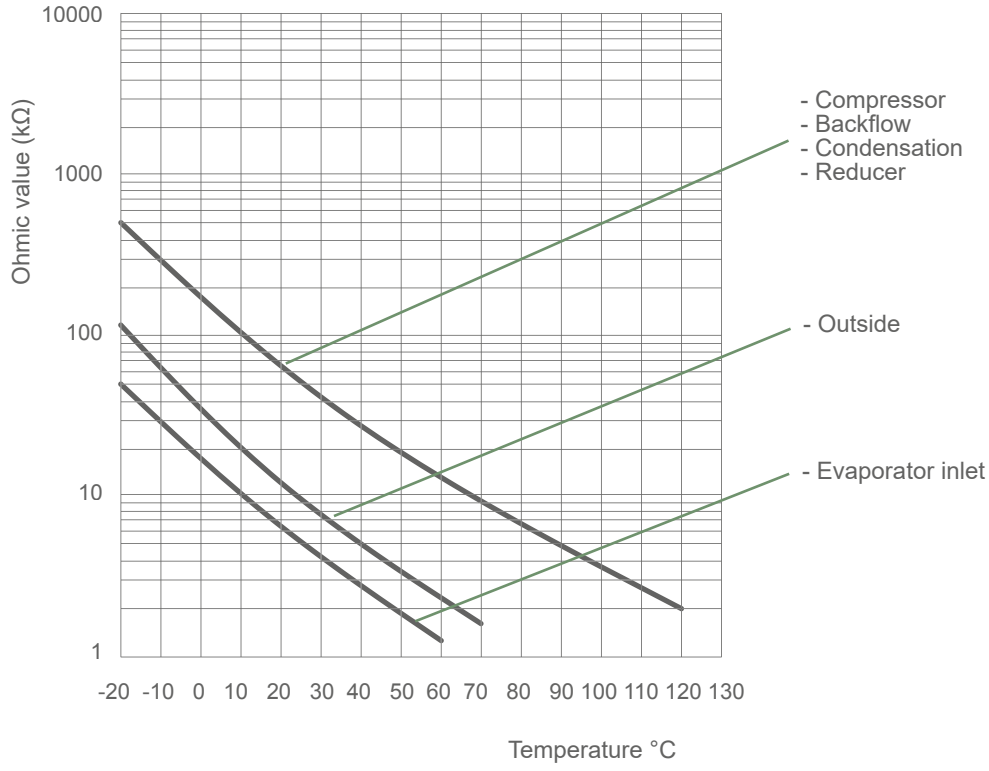

fig. 5 - Ohmic sensor values (Outdoor unit)

■ Outdoor unit

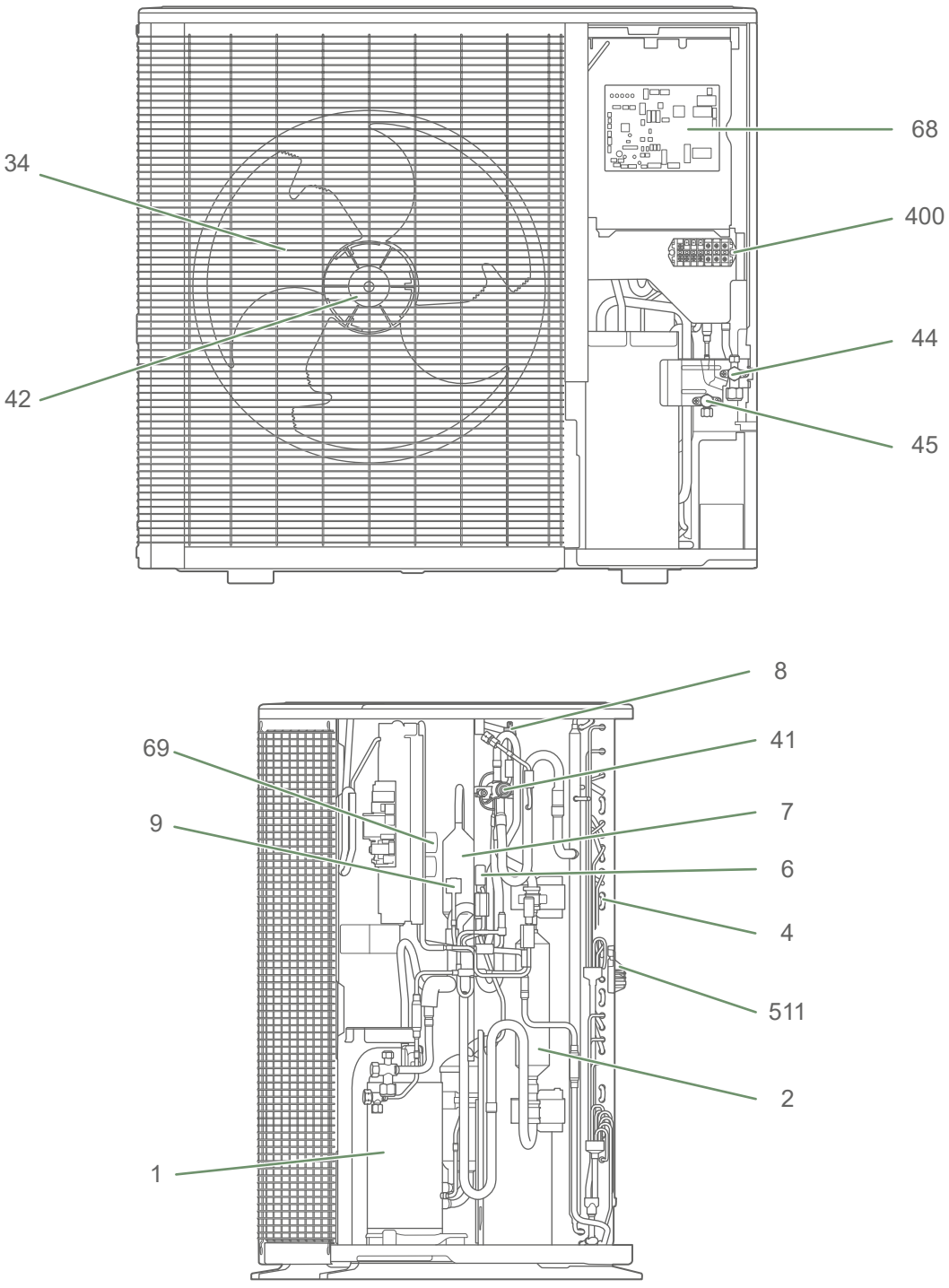

1 - Compressor
2 - Battery
4 - Heat exchanger (Evaporator)
6 - Reducer (Expansion valve)
7 - Filter
8 - Pressure sensor (On/Off)
9 - Pressure sensor (Value)
34 - Fan
41 - Schrader valve
42 - Fan motor
44 - Refrigeration fitting “Gas”
45 - Refrigeration fitting “Liquid”
68 - Main board
69 - Inverter board
400 - Supply terminal block
511 - Outside T° sensor

fig. 7 - Outdoor unit components

■ Hydraulic unit

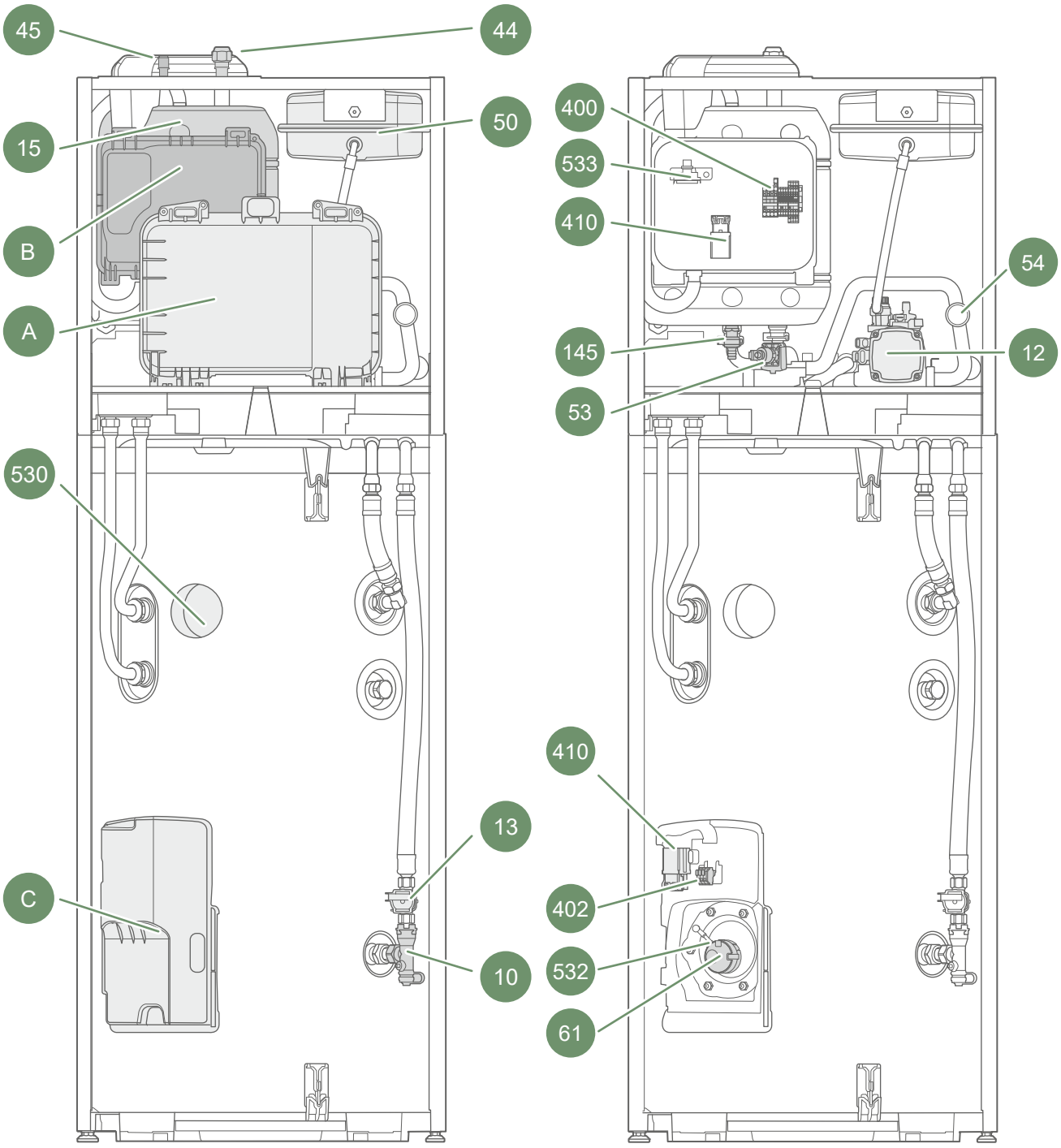

Electrical box:
A - Main.
B - Electrical heating backup.
C - DHW supply.

Sensors:
530 - Domestic water sensor.

10 - Valve
12 - Circulation pump
13 - DHW flowmeter
15 - Heat exchanger (Condenser)
44 - Refrigeration fitting “Gas”
45 - Refrigeration fitting “Liquid”
50 - Expansion vessel
53 - Directional valve
54 - Manometer
61 - Electrical DHW backup
145 - Water drain off
400 - Supply terminal block
402 - DHW terminal block
410 - Relay
532 - DHW safety thermostat
533 - Heat pump backup safety thermostat

fig. 8 - Hydraulic unit components

▶ Working principle

The heat pump transfers the energy in the outside air towards the home to be heated and towards the production of domestic hot water.

The heat pump is made up of four main elements through which circulates a refrigerant (R32).

- In the evaporator (*fig. 7, page 12*): Calories are extracted in the outside air and transferred to the refrigerant. Since it has a low boiling point, it goes from liquid state to steam, even in cold weather (up to -20°C outside).
- In the compressor (*fig. 7, page 12*): The vaporised refrigerant is brought to high pressure and is loaded with even more calories.
- In the condenser (*fig. 8, page 13*): The refrigerant energy is transferred to the heating circuit. The refrigerant goes back to liquid state.
- In the reducer (*fig. 7, page 12*): The liquefied refrigerant is brought back to low pressure and recovers its initial temperature and pressure.

The heat pump is equipped with a regulator to control the inside temperature based on the outdoor temperature measure, using temperature control. The (optional) room sensor has a corrective action on the temperature control.

The hydraulic unit is equipped with an electrical backup or backup boiler system* activated to provide additional heat on the coldest days.

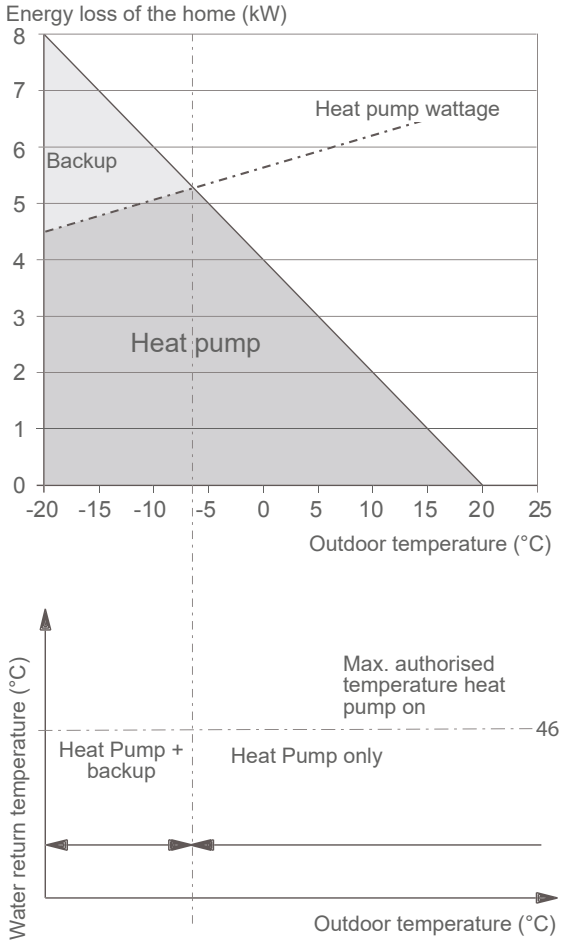

fig. 9 - Operating example and limits

■ Control features

- The heating circuit flow temperature is temperature controlled.
- According to the heating flow temperature, the heat pump power is adjusted via the “Inverter” compressor.
- Electrical backup management.
- With the (optional) room sensor, daily time slots can be defined for comfort or reduced ambient temperature.
- Commutation between summer and winter is automatic.
- Domestic hot water: heating time programming, Domestic Hot Water (DHW) circulation pump management.

■ Fan convectors with integrated control system

Do not use a room sensor in the corresponding area.

■ Protective functions

- Anti legionella cycles for domestic hot water.
- The hydraulic unit includes a frost-protection function for the installation: if the heating circuit flow temperature is below 4°C, it triggers the frost protection (provided the heat pump power supply is not interrupted).

■ Working principle of domestic hot water (DHW)

Only one temperature can be set for domestic hot water (DHW). Production of DHW is activated according to the tapped volume of water and the tank temperature. There are two heating modes available:

Comfort: this mode provides maximum comfort with a large quantity of hot water at all times.

Eco: this mode guarantees maximum energy saving while ensuring domestic comfort and heating

In these two modes, it is possible to choose one or two forced load times.

Domestic hot water (DHW) is produced by the heat pump and topped up by the hot water tank electrical backup if:

- The DHW temperature setpoint hasn't been reached by the end of the total DHW load period.
- The DHW temperature setpoint exceeds the maximum temperature that can be reached in thermodynamic.
- The heat pump is unable to heat the hot water tank quickly enough.

To ensure a DHW setpoint over 55°C, the electrical backup must be left in operation

The production of DHW has priority over heating, however it is managed using cycles regulating times allocated to heating and DHW production in the event of simultaneous requests.

Anti legionella cycles can be programmed.

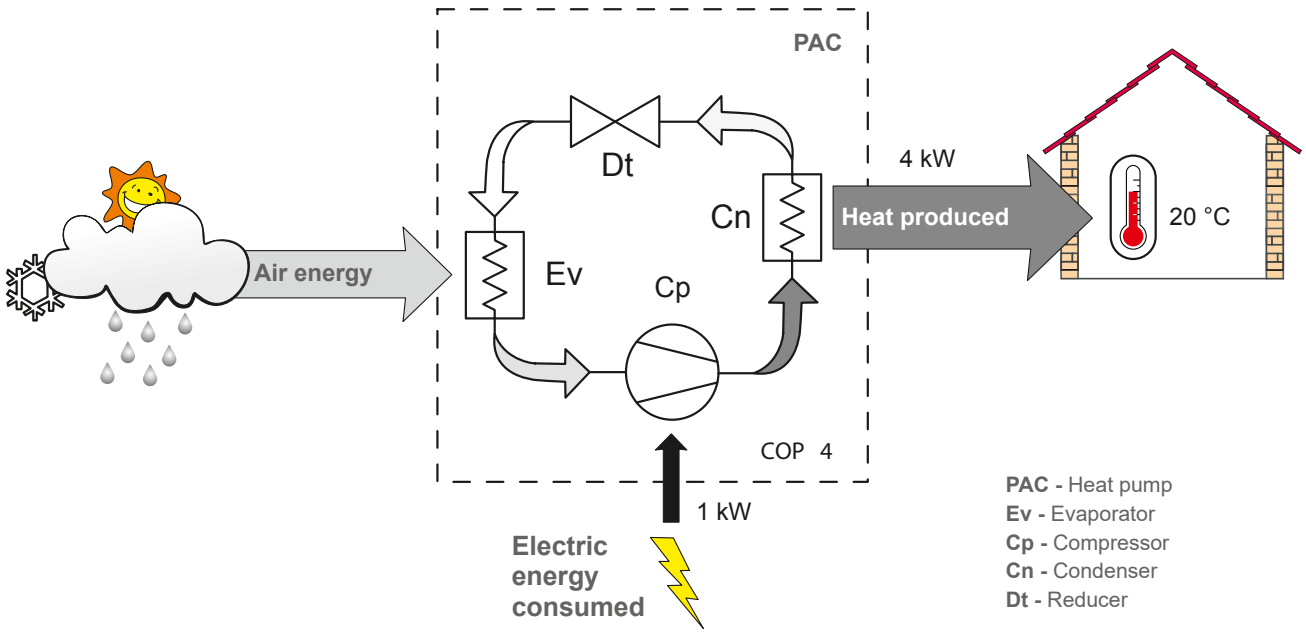

fig. 10 - Working principle of a heat pump

Implantation

▶ Refrigeration connection fitting

Handle pipes and pass them through concrete floors or walls with protective plugs fitted or after brazing.

Keep the protective plugs or brazed ends until product commissioning.

Connection between the outdoor unit and the hydraulic unit shall ONLY be done with new copper connections (of the refrigeration type), insulated separately.

Conform to the pipe diameters (*fig. 31*).

Conform to the maximum and minimum distances between the hydraulic unit and the outdoor unit (*fig. 31, page 28*), as they guarantee system performance and lifetime.

The minimum length of refrigeration connections is 5 m for proper operation.

Appliance warranty would be excluded should the appliance be used with refrigeration connections be under 5 m (tolerance +/-10%).

Make sure the refrigeration connections are protected from any physical deterioration.

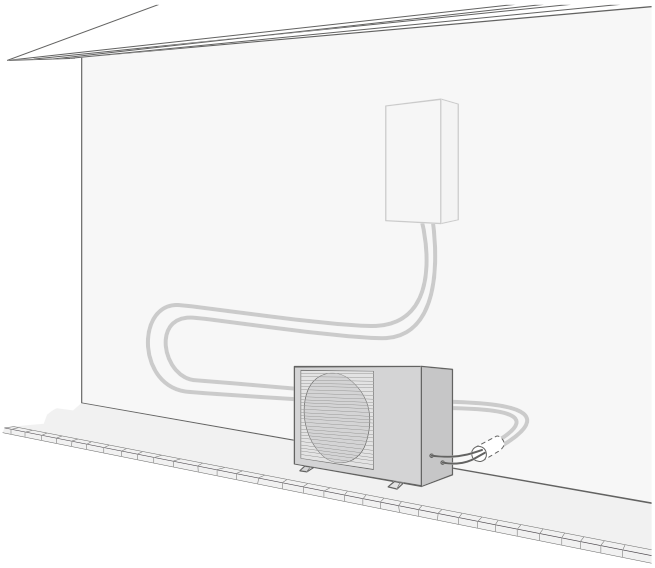

fig. 11 - Example of a recommended refrigeration connection layout

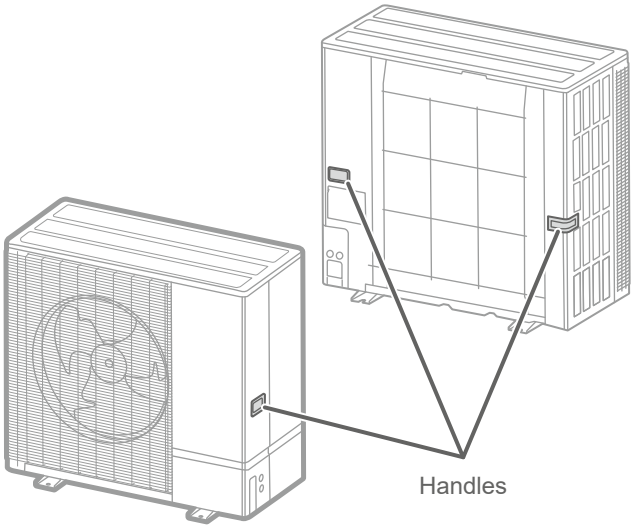

fig. 12 - Outdoor unit transport

▶ Outdoor unit installation

▼ Installation precautions

The outdoor unit should always be installed outdoors. If a shelter is required, it should include wide openings on all 4 sides and comply with installation clearance requirements.

- Select the location of the appliance after talking to the client.
- If possible, select a location that's sunny and protected from strong, cold winds (mistral, tramontane, etc.).
- The appliance must be fully accessible for installation works and future maintenance works (*fig. 15, page 17*).
- Make sure there is enough space for the connections to the hydraulic unit to be done easily.
- The outdoor unit is weatherproof, however you should avoid installing it in a location where it might be exposed to dirt or significant water discharge (under a defective gutter for instance).
- When operating, water may be discharged from the outdoor unit. Do not install the appliance on a terrace, but choose a well-drained spot instead (bed of gravel or sand). If the appliance is installed in a region where the temperature can stay below 0°C for a long period, check whether the presence of ice may represent any danger. It is also possible to connect a drain pipe to the condensate drain tray (optional) (*fig. 18 page 17*).
- There should be no obstacle hindering air circulation through the evaporator and out of the fan
- Keep away the outdoor unit from any sources of heat or flammable products.
- Make sure the appliance doesn't cause any disturbance to neighbours and users (noise, draught, low-temperature air blown towards plants in the trajectory, which may freeze).

A ≥ 100 mm
B ≥ 200 mm
C ≥ 250 mm
D ≥ 300 mm
E ≥ 400 mm
F ≥ 500 mm
G ≥ 600 mm

H ≥ 1000 mm
J ≥ 1500 mm
K ≥ 3000 mm
L ≥ 3500 mm
M = 300 mm Max
N = 500 mm Max

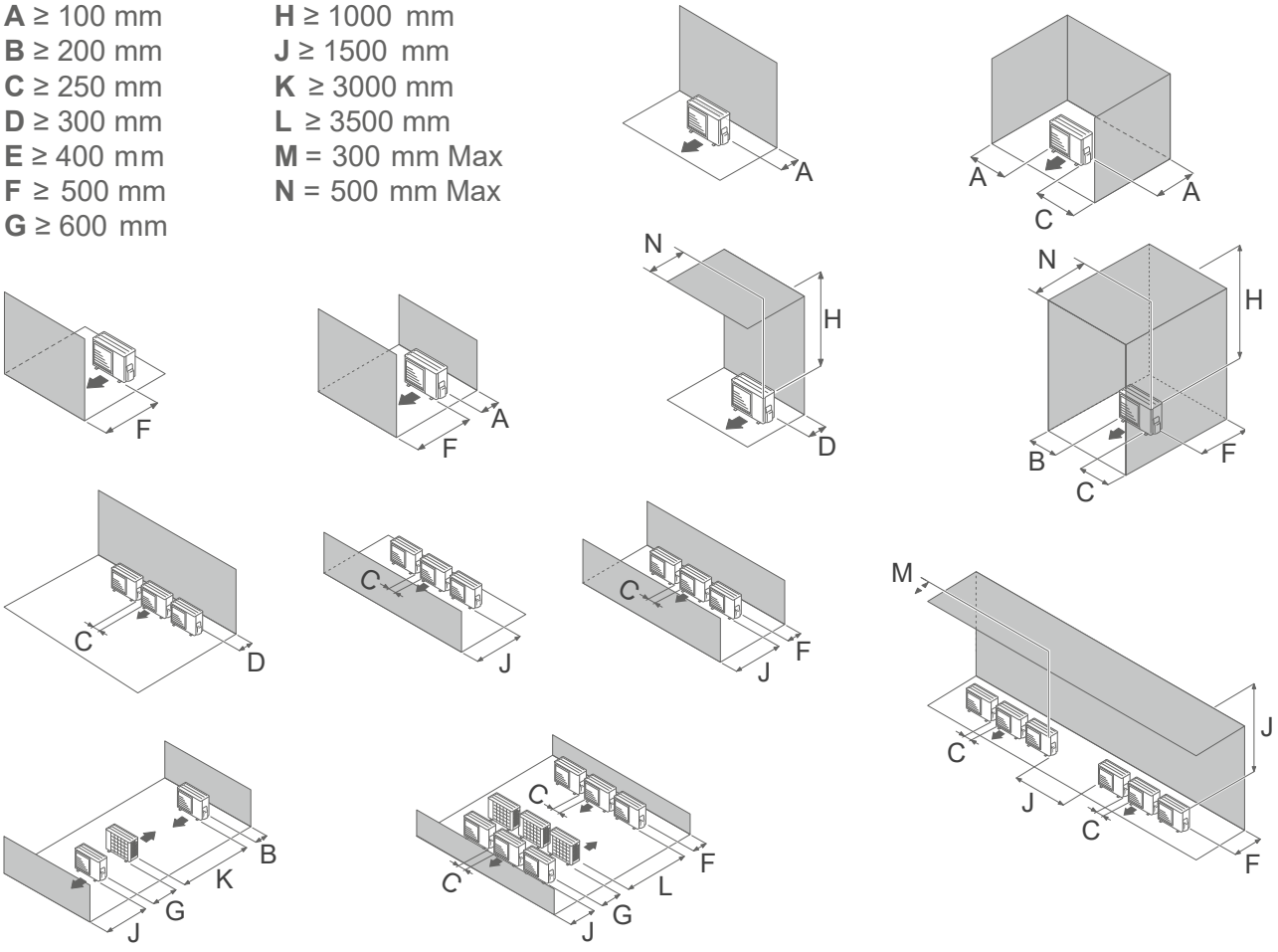

fig. 13 - Minimum installation clearance requirements around the outdoor unit

- There should be no obstacle hindering air circulation through the evaporator and out of the fan.
- Keep away the outdoor unit from any sources of heat or flammable products.
- Make sure the appliance doesn't cause any disturbance to neighbours and users (noise, draught, low-temperature air blown towards plants in the trajectory, which may freeze).
- The surface on which the outdoor unit is installed must:
- Be permeable (earth, bed of gravel...),
- Support well beyond its weight,
- Allow for secure fixing,
- Not transmit any vibrations to the dwelling. Anti-vibration mounts are available as accessories.
- The outdoor unit must be secured to the ground.

▼ Installing the outdoor unit

⚠ **Do not tilt the outdoor unit by more than 3 degrees.**

The outdoor unit must be raised by at least 50 mm from the ground. In snowy regions, this height must be increased without exceeding 1.5 m.

Secure the outdoor unit using screws and spring or toothed washers to prevent any loosening.

⚠ **In regions with heavy snow, if the outdoor unit air inlet and outlet are blocked by snow, heating might be difficult and is likely to result in malfunction.**

Build a canopy or place the appliance on a raised frame (local configuration).

- Place the appliance on a strong frame to minimise shocks and vibrations.
- Do not place the appliance directly on the ground as it may cause disturbance.

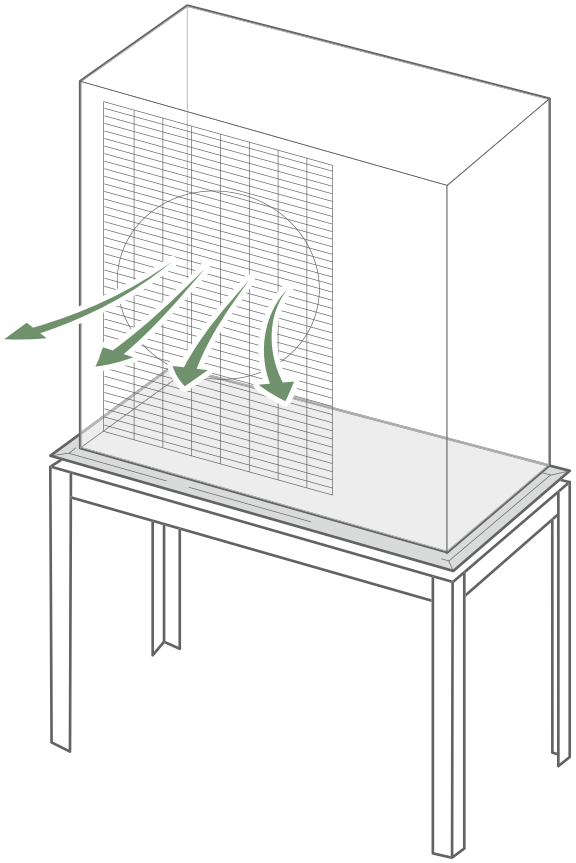

fig. 14 - Raised frame (optional)

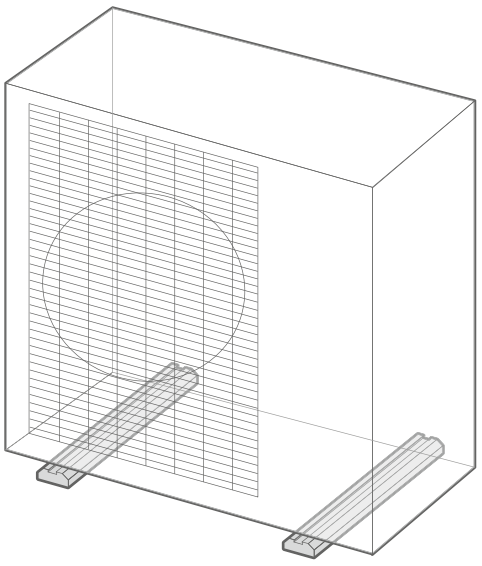

fig. 15 - Rubber floor mounts (optional)

▼ Condensate drainage connection

The outdoor unit may generate a significant volume of water.

If a drain pipe is absolutely required:

- Use the elbow supplied and connect a drain pipe of diameter 16 mm to evacuate condensates.
- Provide for gravity discharge of condensates
  (waste water, rain water, bed of gravel).

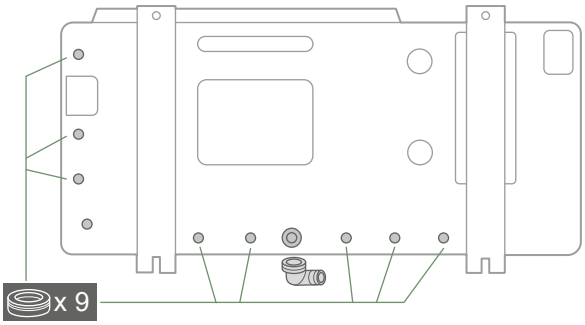

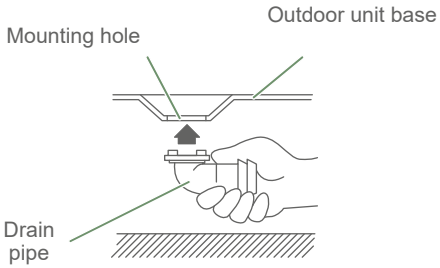

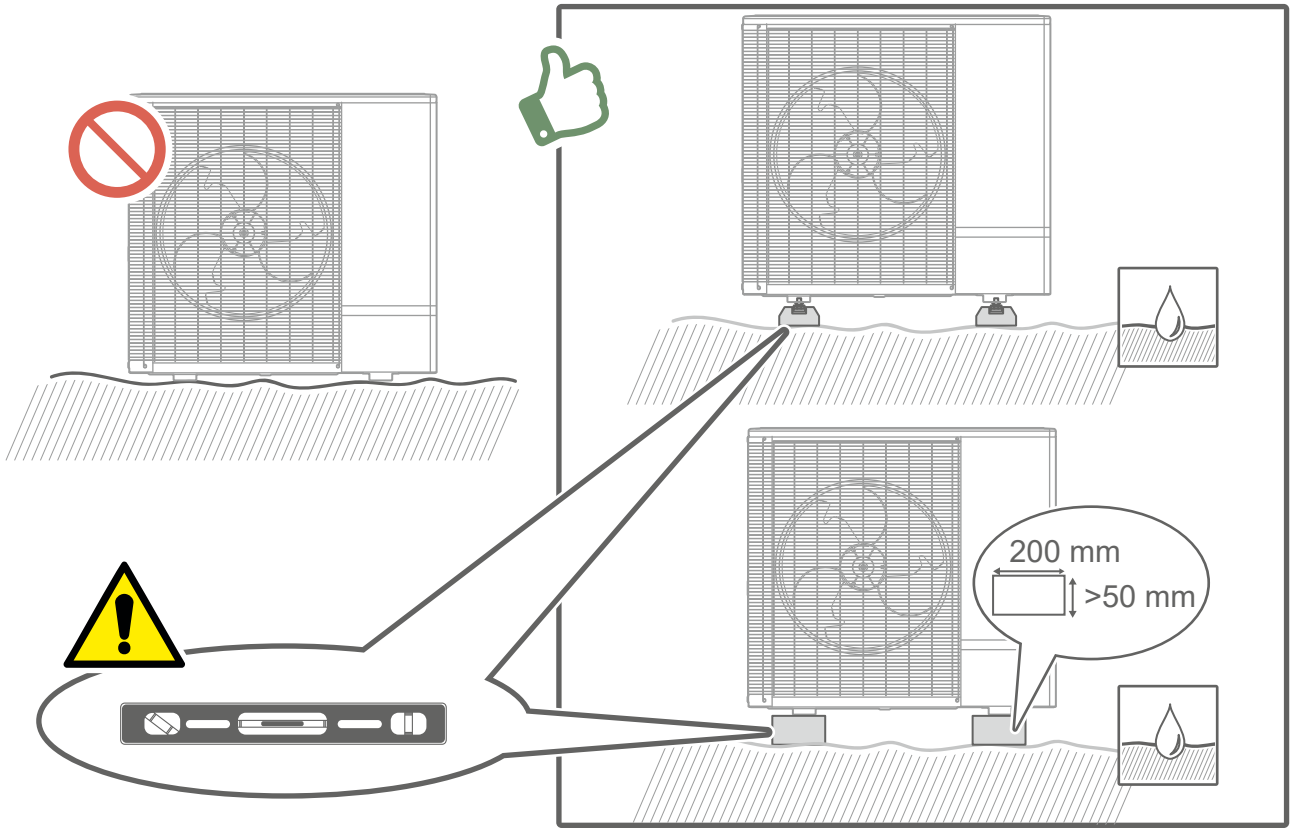

fig. 16 - Installing the outdoor unit, evacuation of condensates

▶ Installing the hydraulic unit

Sources of heat such as:
- flames,
- hot surfaces >700°C (filament),
- unsealed contactor > 5kVA
are to be avoided inside the room where the heat pump is located.
If it cannot be avoided, view *page 23*.

▼ Installation precautions

- Select the location of the appliance after talking to the client.
- The room in which the appliance operates must comply with applicable regulations.
- To make maintenance easier and allow access to the various components, it is recommended to allow for enough space all around the hydraulic unit (*fig. 17*).
- Make sure the hydraulic unit is level (*fig. 19*).

Other precautions

Make sure there are no flammable gases near the heat pump during installation, particularly if it needs brazing. Appliances are not fireproof and should therefore not be installed in an explosive environment.

The exchanger is under nitrogen pressure to prevent risks of humidity.

- To prevent condensation inside the condenser, do not remove the refrigeration circuit plugs **until you proceed with the refrigeration connections.**
- If the refrigeration connection takes place at the end of the works, make sure the refrigeration circuit plugs* stay in place and secured during the whole time.

* (Towards the hydraulic unit and towards the outdoor unit)

- After each intervention on the refrigeration circuit and before the final connection, make sure you put the plugs back on to prevent any pollution of the refrigeration circuit (It is prohibited to block with tape).

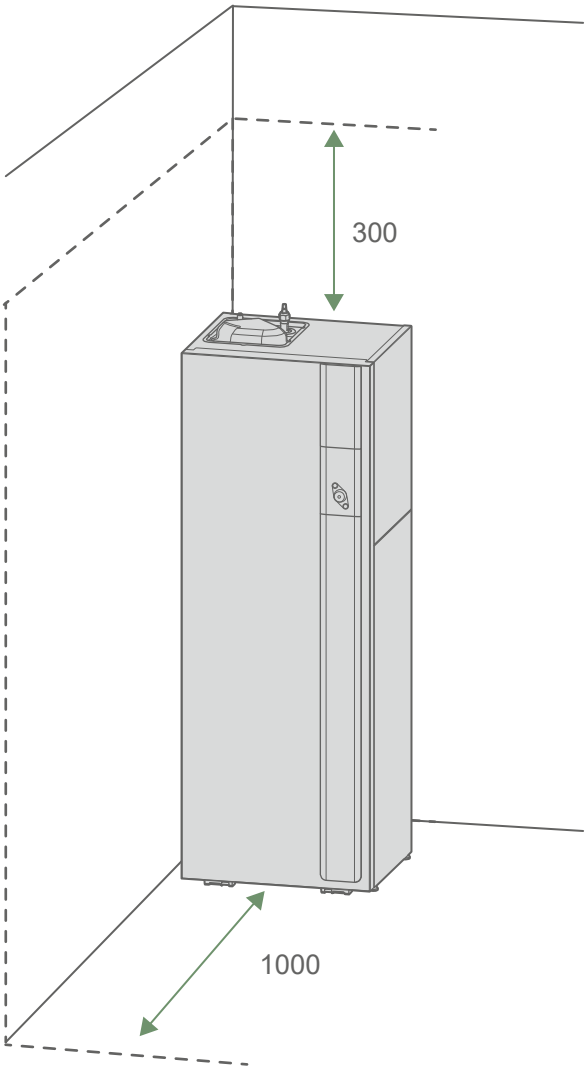

fig. 17 - Minimum installation clearance requirements around the hydraulic unit for maintenance

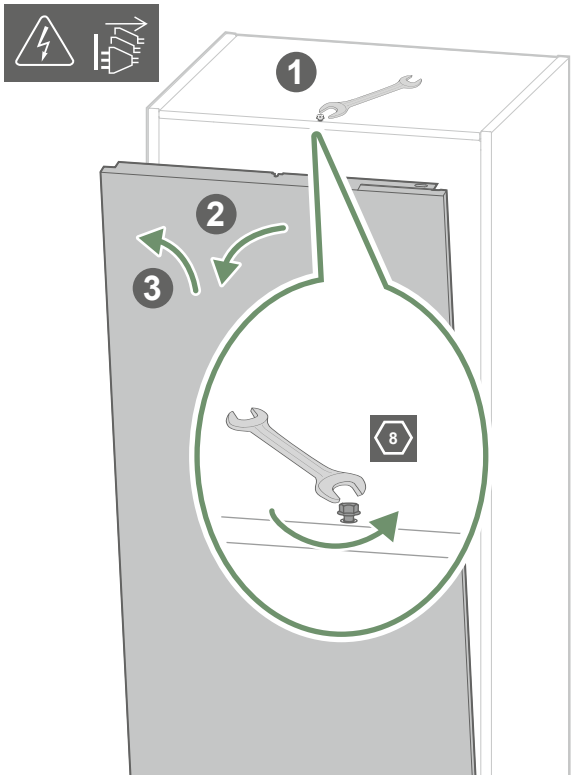

fig. 18 - Opening the front panel

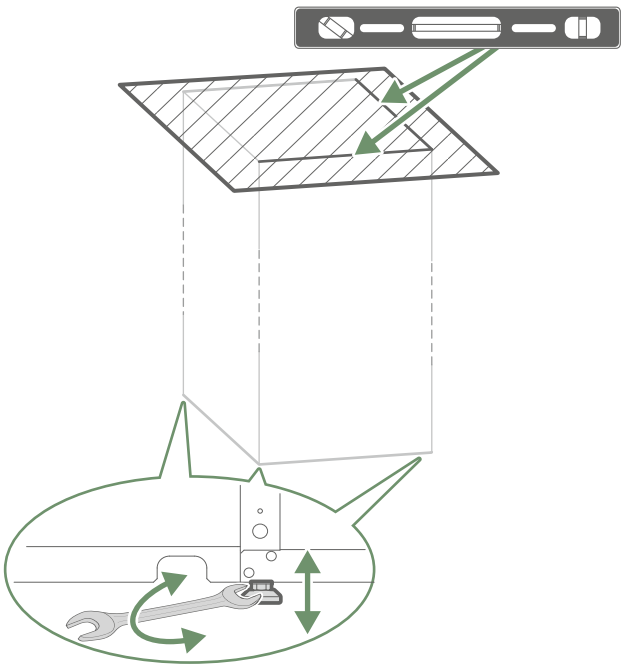

fig. 19 - Levelling

▼ Minimum room volume

In accordance with standard EN 378-1 -2017 (safety and environment requirements for heat pumps), the heat pump hydraulic unit and all refrigeration connections going through the inhabited area must be installed in rooms complying with the minimum volume hereafter (view *fig. 20*):

The minimum volume of the room (in m^3) is calculated in accordance with the following formula: “Fluid fill load” (in kg) / 0.3.

Failing this, you must make sure that:

- The room is naturally ventilated with another room, where the total volume of the two rooms is greater than “fluid fill load” (in kg) / 0.3 kg/m^3. The two rooms are ventilated with openings of at least: view *fig. 22 and fig. 21*.
- Or the room is mechanically ventilated:
  - Minimum flow 165m^3/H;
  - Extraction less than 0.20 m from the ground.

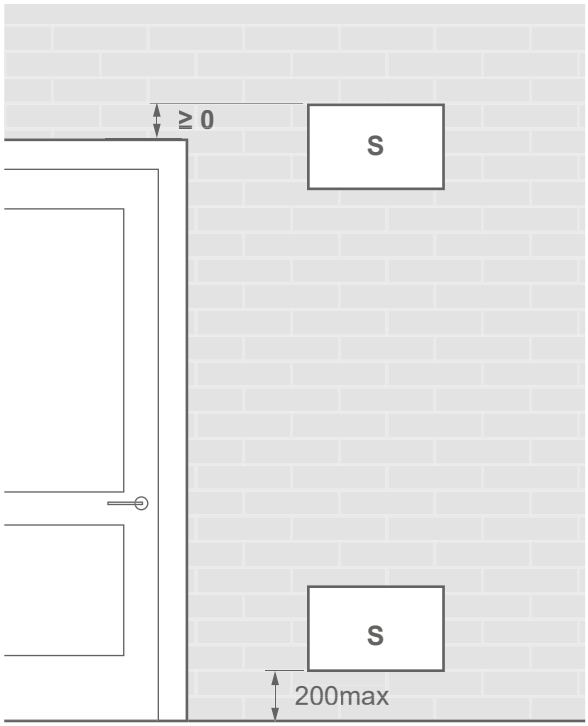

fig. 21 - Position of openings for ventilation

Length of refrigeration connections			9 12 12 Tri	14 14 Tri
15 m	R32 gas charge	g	1400	1630
	Min. volume	**m^3**	**4.67**	**5.43**
16 m	R32 gas charge	g	1420	1650
	Min. volume	**m^3**	**4.73**	**5.50**
17 m	R32 gas charge	g	1440	1670
	Min. volume	**m^3**	**4.80**	**5.57**
20 m	R32 gas charge	g	1500	1730
	Min. volume	**m^3**	**5.00**	**5.77**
21 m	R32 gas charge	g	1520	1750
	Min. volume	**m^3**	**5.07**	**5.83**
22 m	R32 gas charge	g	1540	1770
	Min. volume	**m^3**	**5.13**	**5.90**
23 m	R32 gas charge	g	1560	1790
	Min. volume	**m^3**	**5.20**	**5.97**
24 m	R32 gas charge	g	1580	1810
	Min. volume	**m^3**	**5.27**	**6.03**
25 m	R32 gas charge	g	1600	1830
	Min. volume	**m^3**	**5.33**	**6.10**

fig. 20 - Minimum volume

Volume of the room (m^3)	*1.0*	*1.5*	*2.0*	*2.5*	*3.0*	*3.5*	*4.0*	*4.5*	*5.0*	*5.5*	*6.0*	*6.5*
R32 gas charge (g)	**Minimum section (S) of openings (cm^2)**											
1400	**750**	**500**	**400**	**300**	**250**	**250**	**200**	**200**				
1500	**800**	**550**	**400**	**350**	**300**	**250**	**200**	**200**	**200**			
1600	**850**	**550**	**450**	**350**	**300**	**250**	**250**	**200**	**200**			
1700	**900**	**600**	**450**	**350**	**300**	**250**	**250**	**200**	**200**	**200**		
1800	**950**	**650**	**500**	**400**	**350**	**300**	**250**	**250**	**200**	**200**	**200**	
1840	**950**	**650**	**500**	**400**	**350**	**300**	**250**	**250**	**200**	**200**	**200**	

fig. 22 - Section of openings

▼ With source of heat

With sources of heat such as:
- flames,
- hot surfaces >700°C (filament),
- unsealed contactor > 5kVA

• In accordance with standard IEC 60-335-2-40, the heat pump hydraulic unit and all refrigeration connections going through the inhabited area must be installed in rooms complying with the minimum surface area (*fig. 24*).

Depending on the total coolant load (heat pump + connections + additional filling):

if the minimum surface area (*fig. 24*) cannot be followed, follow the instructions in *fig. 26* to take into account the surface area of adjoining rooms and create ventilations (view *fig. 23* and *fig. 25*).

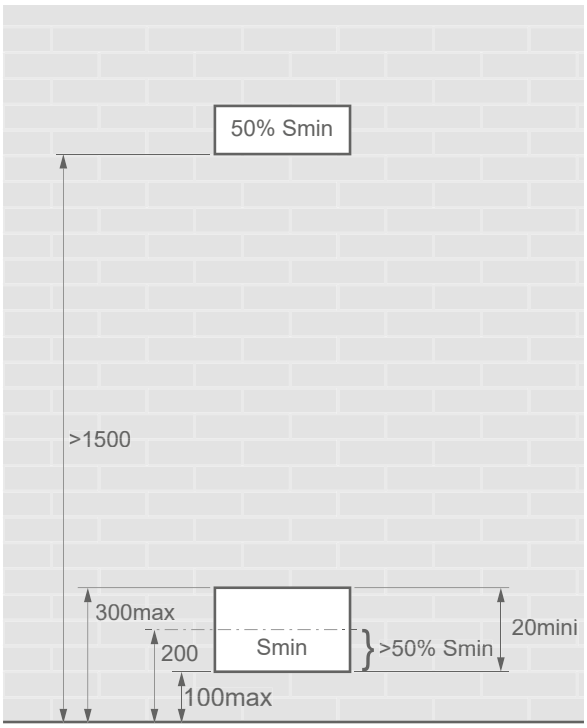

fig. 23 - Position of openings for ventilation

Length of refrigeration connections			9 12 12 Tri	14 14 Tri
15 m	R32 gas charge	g	1400	1630
	Min. surface	**m²**	**3.41**	**3.97**
16 m	R32 gas charge	g	1420	1650
	Min. surface	**m²**	**3.46**	**4.02**
17 m	R32 gas charge	g	1440	1670
	Min. surface	**m²**	**3.51**	**4.07**
20 m	R32 gas charge	g	1500	1730
	Min. surface	**m²**	**3.65**	**4.21**
21 m	R32 gas charge	g	1520	1750
	Min. surface	**m²**	**3.70**	**4.26**
22 m	R32 gas charge	g	1540	1770
	Min. surface	**m²**	**3.75**	**4.31**
23 m	R32 gas charge	g	1560	1790
	Min. surface	**m²**	**3.80**	**4.36**
24 m	R32 gas charge	g	1580	1810
	Min. surface	**m²**	**3.85**	**4.41**
25 m	R32 gas charge	g	1600	1830
	Min. surface	**m²**	**3.90**	**4.46**

fig. 24 - Minimum installation surface

Surface of room A (m²)	*0.8*	*1.0*	*1.5*	*2.0*	*2.5*	*3.0*	*3.5*	*4.0*	*4.5*	*5.0*	*5.5*	*6.0*	*6.5*	*7.0*	*7.5*
R32 gas charge (g)	**Minimum section (Smin) of lower openings (cm²)**														
1400	**381**	**367**	**330**	**294**	**258**	**222**	**186**	**150**	**114**	**78**	**42**	**6**			
1500	**412**	**398**	**362**	**326**	**290**	**254**	**218**	**181**	**145**	**109**	**73**	**37**	**14**		
1600	**444**	**429**	**393**	**357**	**321**	**285**	**249**	**213**	**177**	**141**	**105**	**68**	**46**	**29**	**12**
1700	**475**	**461**	**424**	**388**	**352**	**316**	**280**	**244**	**208**	**172**	**136**	**100**	**77**	**61**	**45**
1800	**506**	**492**	**456**	**420**	**384**	**348**	**312**	**275**	**239**	**203**	**167**	**131**	**109**	**93**	**78**
1840	**519**	**504**	**468**	**432**	**396**	**360**	**324**	**288**	**252**	**216**	**180**	**144**	**122**	**106**	**91**

fig. 25 - Section of openings (with source of heat)

Minimum surface

View fig. 24

Min. surface ____ m²

Room surface (**A**) ____ m²

Room surface (**A**) > Min. surface?

Yes ☐ No ☐

No

Yes

No recommendation

Hydraulic unit installed in an unoccupied room

Yes ☐ No ☐

Yes

Creation of openings for natural ventilation outside

View fig. 23 and 25

No

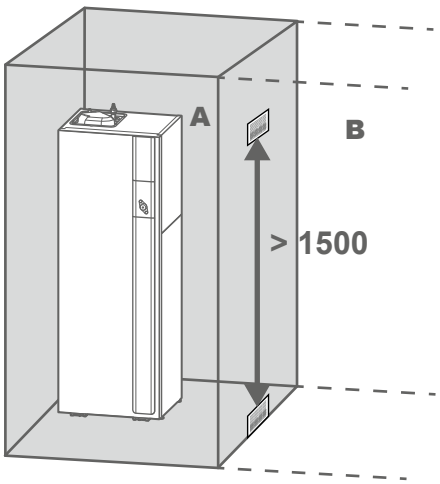

Surface of adjacent room

Surface of adjacent room (**B**) ____ m²

Total surface (**A**+**B**) ____ m²

Room surface (**A**+**B**) > Min. surface?

Yes ☐ No ☐

Yes

Creation of openings for natural ventilation between rooms A and B

View fig. 23 and 25

No

Inclusion of a detector and mechanical ventilation

fig. 26 - Minimum surface

Refrigeration connections

This appliance uses R32 refrigerant.

You must comply with the legislation on the handling of refrigerants.

▶ Rules and precautions

Connections must be done on the day the installation is filled with gas (view *"Filling with gas procedure", page 64***).**

• Minimum tool requirements

- Set of manometers (*Manifold*) with exclusively HFC-specific flexible rods (Hydrofluorocarbons).
- Vacuum gauge with isolation valves.
- HFC-specific vacuum pump (standard vacuum pump can be used if, and only if, it is equipped with a vacuum check valve).
- Flaring tool, Pipe cutter, Deburrer, Wrenches.
- Authorised refrigerant sensor (calibrated with 5 g per year).

It is prohibited to use tools which have been in contact with HCFCs (R22 for example) or CFCs.

The warranty shall not apply if the above instructions are not followed.

• Flared connections

It is prohibited to lubricate with mineral oil (for R12, R22).

Only lubricate with alkylbenzene oil. If there is no alkylbenzene oil, drymount.

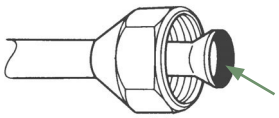

Spread the flaring part with **alkylbenzene oil.**
Do not use mineral oil.

• Refrigeration circuit brazing (if required)

- Silver brazing (40% minimum recommended).
- Brazing only under internal flow of dry nitrogen.

• Other information

- After each intervention on the refrigeration circuit and before the final connection, make sure you put the plugs back on to prevent any pollution of the refrigeration circuit.
- To remove any debris in the pipes, use dry nitrogen to avoid introducing humidity, which would be harmful for the appliance. Generally speaking, you should take all precautions to prevent humidity from going inside the appliance.
- Ensure the thermal insulation of pipes / connections / refrigeration fittings to prevent any condensation. Use insulating sleeves withstanding temperatures of at least 90°C, and at least 15 mm thick if humidity is 80% maximum and at least 20 mm thick if humidity exceeds 80%. Thermal conductivity of the insulator is equal to or lower than 0.040 W/mK. The insulator must be watertight to withstand steam during defrosting cycles. It is prohibited to use glass wool.

▶ Refrigerant pipe shaping

▼ Bending

Refrigerant pipes must exclusively be shaped using a roll bender or a bending spring to prevent any crushing or breakage.

Remove the insulation locally to bend the pipes.

Do not bend the copper more than 90°.

The bend radius must be greater than 2.5x the pipe ø.

Never bend a pipe more than 3 times in the same spot as incipient cracks may appear (metal strain-hardening).

▼ Flarings

- Cut the pipe with a pipe cutter at the suitable length without distorting it.
- Deburr carefully, holding the pipe downwards to prevent any debris from going inside it.
- Remove the flare nut from the fitting located on the valve to be connected and put the pipe through the nut.
- Proceed to flare, making sure the pipe sticks out of the flaring tool.
- After flaring, check the state of (**L**). There must be no scratch or incipient crack. Also check dimension (**B**).

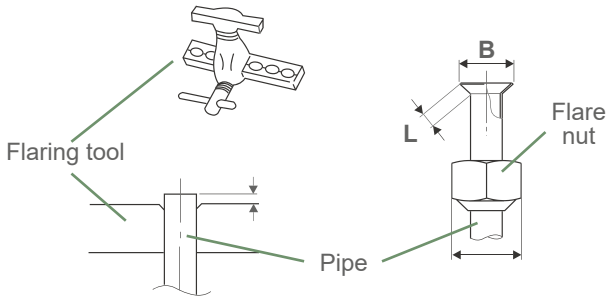

pipe ø	Dimensions in mm		
	L	B $^{0}/_{-0,4}$	C
6.35 (1/4")	1.8 to 2	9.1	17
9.52 (3/8")	2.5 to 2.7	13.2	22
12.7 (1/2")	2.6 to 2.9	16.6	26
15.88 (5/8")	2.9 to 3.1	19.7	29

fig. 27 - Flare connection flaring

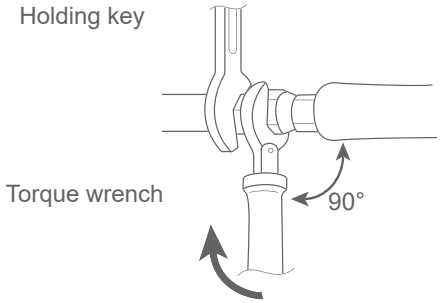

Designation	Tightening torque
Flare nut 6.35 mm (1/4")	16 to 18 Nm
Flare nut 9.52 mm (3/8")	32 to 42 Nm
Flare nut 12.7 mm (1/2")	49 to 61 Nm
Flare nut 15.88 mm (5/8")	63 to 75 Nm
Plug (A) 3/8", 1/4"	20 to 25 Nm
Plug (A) 1/2"	28 to 32 Nm
Plug (A) 5/8"	30 to 35 Nm
Plug (B) 3/8", 5/8", 1/2", 1/4"	12.5 to 16 Nm

Plug (A) and (B): view *fig. 43, page 65*.

fig. 28 - Tightening torques

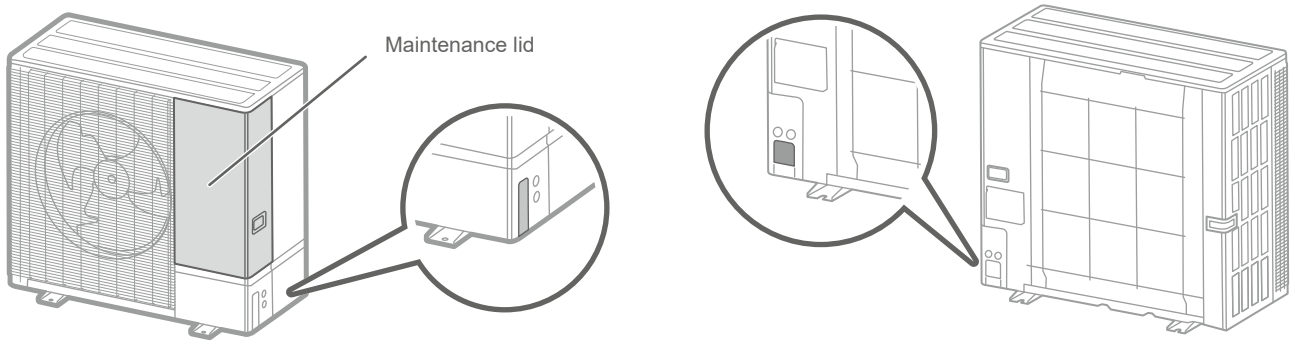

fig. 29 - Pre-cut openings

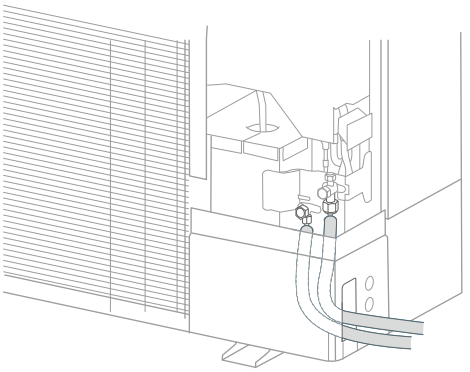

■ **Side connection**

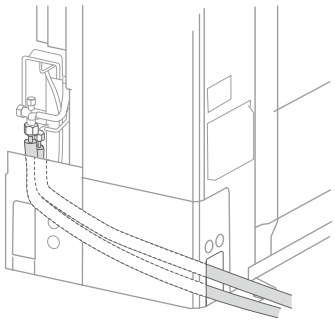

■ **Back connection**

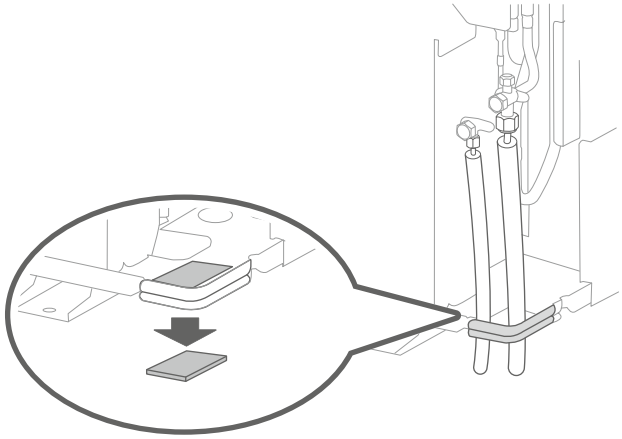

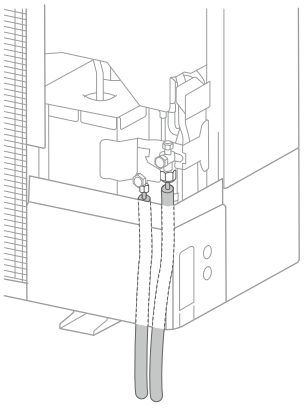

■ **Bottom connection**

fig. 30 - Layout of outdoor unit refrigeration connections.

		Gas	Liquid
Outdoor unit fittings		1/2	1/4
Refrigeration connections	***Diameter***	1/2	1/4
	Minimum length (L)	5 m	
	Maximum length* (L)	15 m	
	Maximum length** (L)	25 m	
	Maximum drop** (D)	20 m	
Adapter (reducer) male-female		1/2 - 5/8	1/4 - 3/8
Hydraulic unit fittings		5/8	3/8

*: Without additional filling.

**: Taking into account the potential additional filling (view *"Additional filling", page 30*).

Model		9	12	14	12 Tri	14 Tri
HFC R32 [3] refrigerant factory fill	g	1400	1400	1630	1400	1630

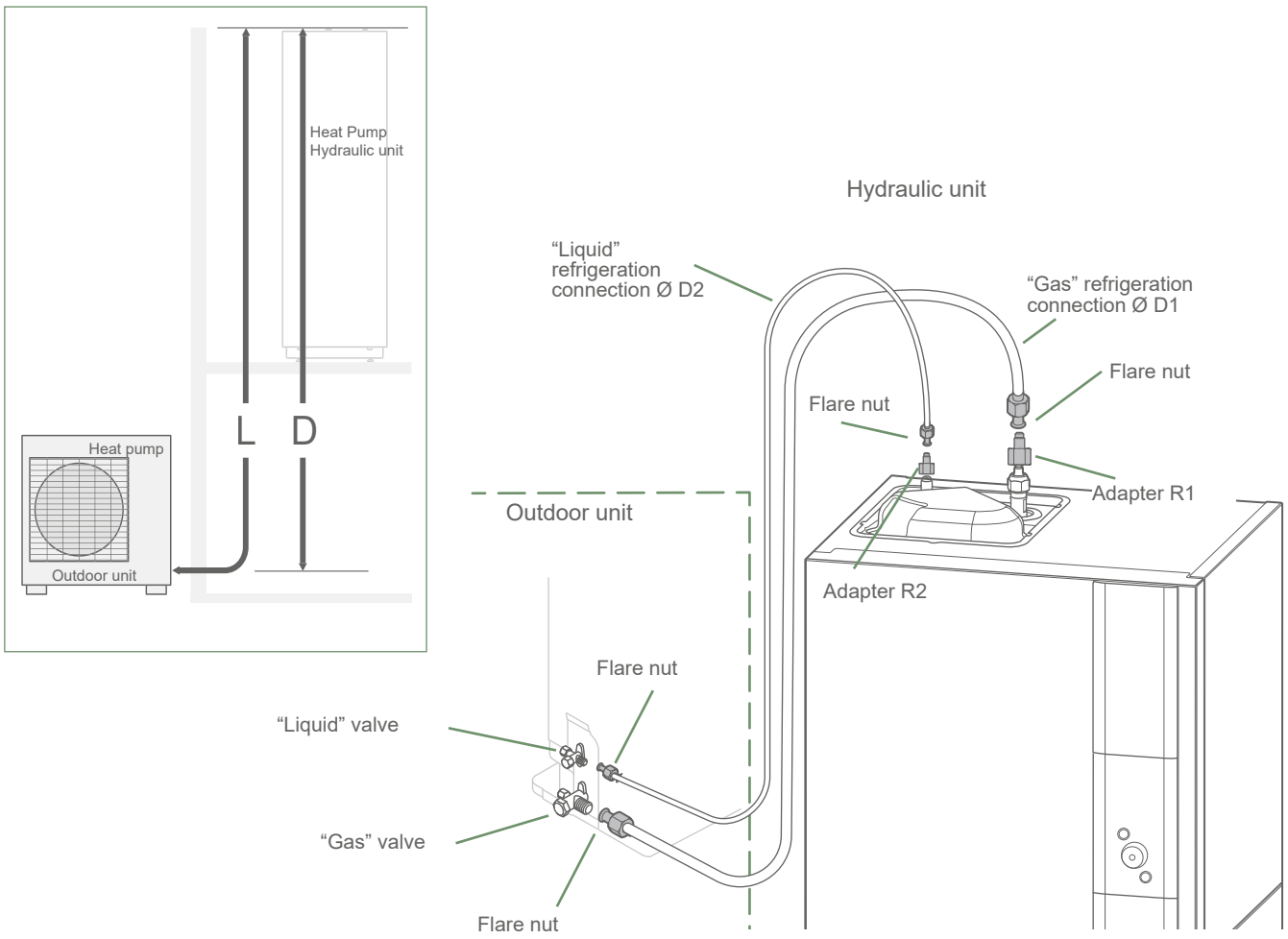

fig. 31 - Refrigeration connections (allowed diameters and lengths)

▶ Checks and connection

The refrigeration circuit is highly sensitive to dust and humidity, check the area around the connection is dry and clean before removing the plugs protecting the refrigeration fittings.

Indicative blowdown value: 6 bar for 30 seconds minimum for a 20-m connection.

Control of gas connection (large diameter).

1 Connect the gas connection to the outdoor unit. Blow down the gas connection with dry nitrogen and observe the tip:

- If water or impurities come out, use a new refrigeration connection.

2 Otherwise, carry out the flared connection and immediately connect it to the hydraulic unit.

Control of liquid connection (small diameter).

3 Connect the liquid connection to the hydraulic unit. Blow down with nitrogen the **gas-condenser connection-liquid connection** and observe the tip (on the side towards the outdoor unit).

- If water or impurities come out, use a new refrigeration connection.
- Otherwise, you can carry out the flared connection and immediately connect it to the outdoor unit.

Be extra careful when positioning the pipe in front of its fitting to avoid damaging the thread. A well-aligned fitting is easily mounted by hand without having to push hard.

- If appropriate, connect an adapter (reducer) 1/4"- 3/8" or 1/2"- 5/8" (view *fig. 31*).
- Follow the indicated tightening torques (*fig. 28, page 26*). If it is too tight, the fitting may break after a long period and lead to a refrigerant leakage.

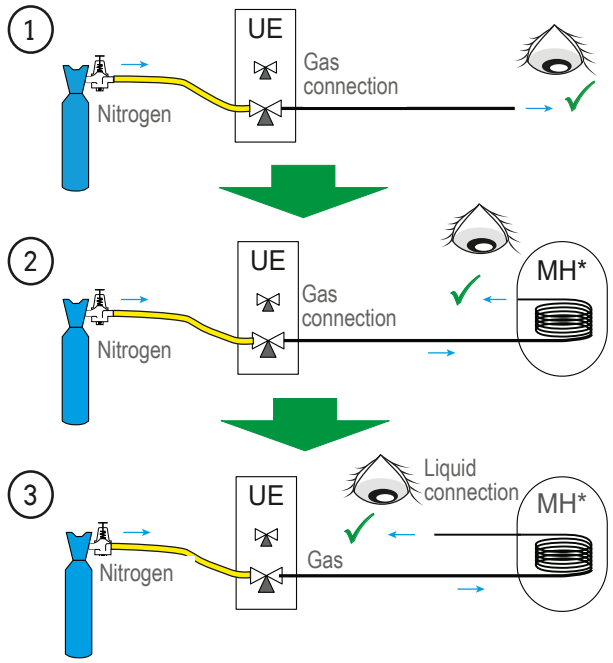

fig. 32 - Checking refrigeration connections

▶ Filling the installation with gas

■ **View annex** *page 64*

Write down the quantity of gas on the outdoor unit label (factory load + additional filling) View *fig. 33*.

If additional filling is required, do it before filling the hydraulic unit with gas. Go to paragraph *"Additional filling"*.

- Remove plugs (**A**) (*fig. 43, page 65*) to access valve controls.
- Open the liquid valve first (small) followed by the gas valve (large) in full, using a hex key (anti-clockwise) without pushing too hard on the stop.
- Quickly unplug the flexible rod from the *Manifold*.
- Replace the 2 original plugs (making sure they are clean) and tighten them in accordance with the tightening torque in table *fig. 28, page 26*. Plugs are exclusively sealed with metal-to-metal seals.
- The outdoor unit does not contain any additional refrigerant to bleed the installation.
- Bleeding by means of flushing is strictly prohibited.

▼ Final leak test

The leak test must be carried out with an authorised gas detector (calibrated with 5 g per year).

Once the refrigeration circuit is filled with gas as previously described, check all refrigeration fittings in the installation for any leaks (4 fittings). If the flared connections have been done correctly, there should be no leak. You may also check the refrigeration tap plugs for any leaks.

In the event of a leak:

- Pump down the gas in the outdoor unit. The pressure must not drop below the atmospheric pressure (0 relative bar on the *Manifold*) so as not to pollute the recovered gas with air or humidity.
- Redo the faulty fitting,
- Restart the commissioning procedure.

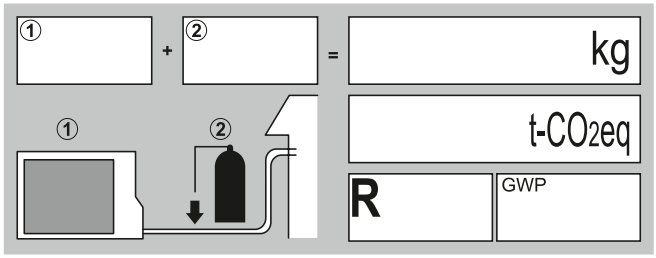

fig. 33 - Additional filling label

▼ Additional filling

The load of outdoor units applies to maximum distances between the outdoor unit and the hydraulic unit as defined on *page 28*. If the distance is greater, an additional filling with R32 will be required. For each type of appliance, the additional filling depends on the distance between the outdoor unit and the hydraulic unit. The additional filling with R32 must imperatively be done by an authorised specialist.

Outdoor unit						
15 m < Connection length ≤ 25 m						
(Connection length - 15 m) x 20 g/m= g						
Factory fill	Connection length in m	16	17	X	24	25
1400 g	Load in g	1420	1440	1400 + (X - 15) x 20 = g	1580	1600
1630 g	Load in g	1650	1670	1630 + (X - 15) x 20 = g	1810	1830

The filling must be done after evacuating the suction and before filling the hydraulic unit with gas, as follows:

- Unplug the vacuum pump (yellow flexible rod) and connect a bottle of R32 in its place **in the liquid filling position**.
- Open the tap of the bottle.
- Bleed the yellow flexible rod by slightly loosening it on the *Manifold* side.
- Place the bottle on a 10g or higher precision scale. Write down the weight.
- Open the blue tap slowly and cautiously and check the value displayed on the scale.
- As soon as the value displayed has gone down by the calculated additional filling value, close the bottle and unplug it.
- Then quickly unplug the flexible rod on the appliance.
- Fill the hydraulic unit with gas.

Use R32 exclusively!

Only use tools adapted to R32 (set of manometers).

Always load in liquid phase.

Do not exceed the maximum length and drop.

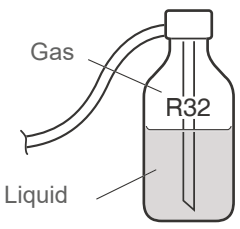

fig. 34 - Bottle of R32 gas

▼ Recovering refrigerant inside the outdoor unit

Before any intervention, make sure <u>all power supplies</u> are disconnected.

Stored energy: after cutting off the power supplies, wait 10 minutes before accessing the inside of the equipment.



Follow the steps below to collect the refrigerant.

1. Switch off the outdoor unit power supply.
2. Remove the front panel. Open the electrical box. Then switch the **DIP SW1** of the interface card to **ON**.
3. Switch the power supply back on. <u>The outdoor unit will start in cold mode approximately 3 minutes after activation</u>.
4. The heat pump circulation pump will start.
5. Close the liquid valve on the outdoor unit within 30 sec. **maximum** after starting the outdoor unit.
6. Close the gas valve on the outdoor unit when the relative pressure goes below 0.02 bar on the *Manifold* or 1 or 2 minutes after closing the liquid valve, while the outdoor unit is running.
7. Switch off the power supply.
8. Refrigerant recovery is completed.

Please note:

- When the heat pump is operating, recovery cannot be activated, even if the **DIP SW1** switch is **ON**.
- Remember to switch back the **DIP SW1** switch to **OFF** after recovery.
- Select the heating mode.
- If recovery fails, try the procedure again after switching off the appliance and opening the “gas” and “liquid” valves. After 2 or 3 minutes, try the recovery again.

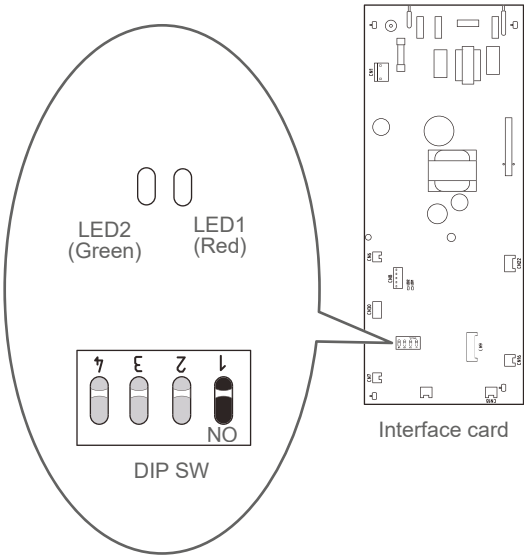

fig. 35 - Location of DIP switches and LEDs on the hydraulic unit interface card

Hydraulic connection

View *"Basic hydraulic diagrams", page 66*

▶ Heating circuit

▼ Flushing the installation

Before connecting the hydraulic unit to the installation, **flush the heating network adequately** to remove any particles which may cause the appliance to malfunction.

Do not use solvents or aromatic hydrocarbons (petrol, oil, etc.).

Follow manufacturer recommendations.

Before the final filling, flush the installation several times if necessary.

For old installations, provide for a dirt separator of sufficient capacity at the heat pump return and at the low point, equipped with an evacuation to collect and eliminate impurities.

In installations equipped with underfloor or ceiling heating/cooling systems, oxygen may cause organic sludge. This sludge may hinder product performance and reliability.

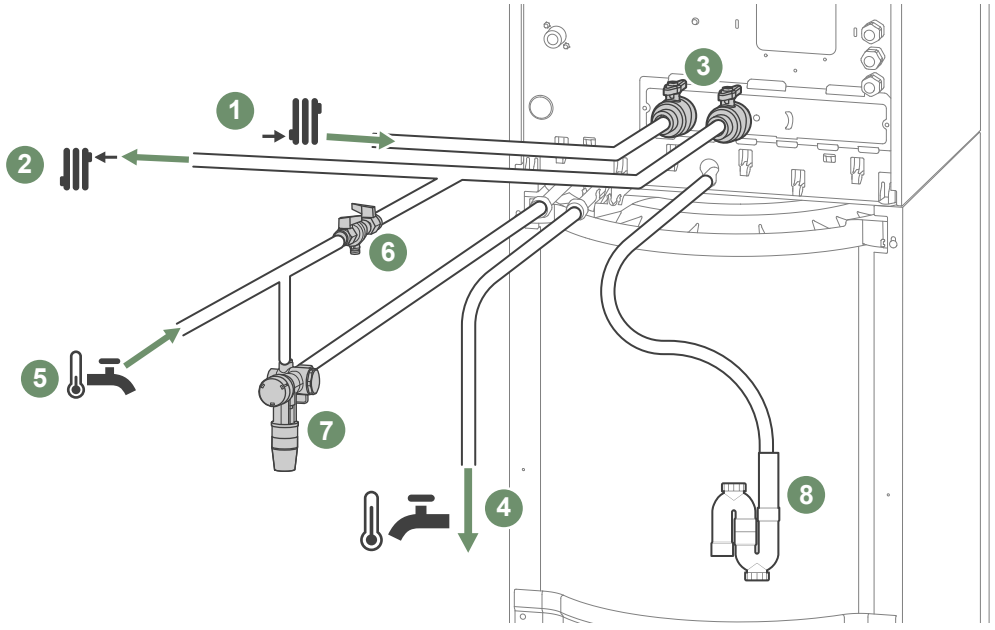

1 - Heating return (1 circuit).
2 - Heating flow (1 circuit).
3 - Shut-off valve (not supplied).
4 - DHW outlet (domestic hot water).
5 - DCW inlet (domestic cold water).
6 - Backflow preventer (not supplied).
7 - Safety group (mandatory / not supplied).
8 - Drain pipe (to sewer).

fig. 36 - Connections

▼ Heating system volume

The minimum water volume for installation must be followed. Install a buffer tank at the heating circuit return if the volume is below this value. In the case of an installation equipped with thermostatic valves, you need to make sure this min. volume of water can circulate.

Min. volume for Installation excluding Heat pump volume (in litres)			
Appliance	**Fan convector**	**Radiators**	**Underfloor heating/cooling system**
	25 / circuit	20	20

▶ Connection to the DHW circuit

Mandatory: Place a safety group on the cold water inlet with a 7 to 10 bar maximum calibrated valve (in accordance with local regulations), connected to a sewer drain. The exhaust must be kept open in the open air. The exhaust must be installed in a frost-protected environment, in a continuous downward slope. Operate the safety group in accordance with manufacturer recommendations. There must be no valve between the safety group and the tank.

Connect the safety valve outlet to the sewer.

It is recommended to put a thermostatic mixer at the hot water outlet.

▶ Installation filling and purge

Check the pipes are fixed, the fittings are secured and the hydraulic unit is stable.

Check the direction of water circulation and check all valves are open.

Fill the installation.

During filling, do not operate the circulation pump, open all drain valves (installation, hydraulic unit) to evacuate any air from the pipes.

Add water until the hydraulic circuit pressure reaches 1 bar.

Check the hydraulic circuit is adequately purged.

Check for any leaks.

After the ⚙ *Commissioning* stage, once the appliance is operating, purge the hydraulic unit again.

The precise filling pressure is determined according to the total dynamic head of the installation.

Electrical connections

Before any intervention, make sure <u>all power supplies</u> are disconnected.

The electrical installation must be done in accordance with applicable regulations (standard NF C 15-100 - France).



The hydraulic unit electrical diagram is detailed on *page 66*

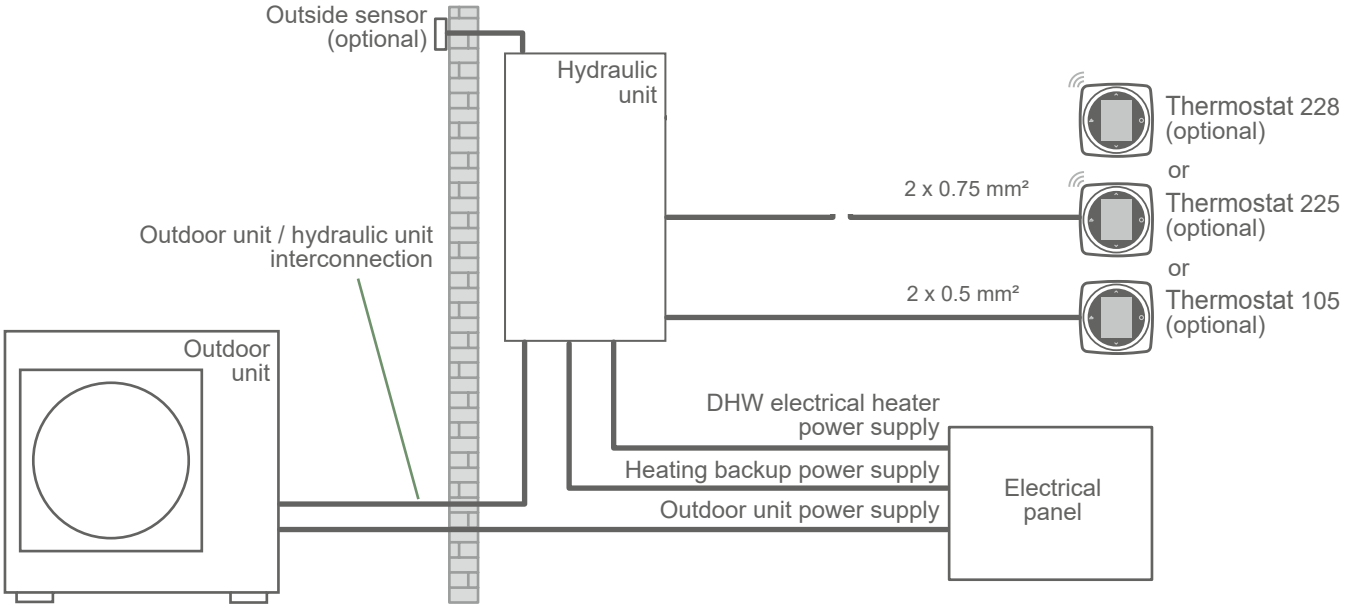

fig. 37 - Overview of electrical connections for a simple installation (1 heating circuit)

	Model(s)	Max. current	Connection cable	Rating of type C circuit-breaker
Single-phase Outdoor unit	9	20.5 A	3G4 mm²	25 A
			3G6 mm²	32 A
	12	23 A	3G4 mm²	25 A
			3G6 mm²	32 A
	14	26 A	3G6 mm²	32 A
Three-phase Outdoor unit	12	9.8 A	5G2.5 mm²	16 A
	14	10.8 A		
Interconnection	9, 12, 14, 12 Tri, 14 Tri	-	4G1.5 mm²	-
DHW electrical heater	9, 12, 14, 12 Tri, 14 Tri	5.2 A	3G1.5 mm²	16 A
Heating backup	9, 12, 14	26 A	3G6 mm²	32 A
	12 Tri, 14 Tri	3 x 13 A	4G2.5 mm²	20 A

Cable dimensions are indicative and the installation engineer should check these dimensions are suitable and meet applicable standards.

▶ Hydraulic unit

To access the connection terminals:

- Remove the front panel.
- Flip the ‘main’ electrical box.
- Open the ‘Electrical heating backup’ electrical box.
- Proceed with the connections in accordance with the diagram on *page 68*.

Do not lay sensor lines and mains lines parallel in order to prevent interference due to mains voltage spikes.

Check all electric cables are secured in the spaces provided.

■ Flipping the main electrical box

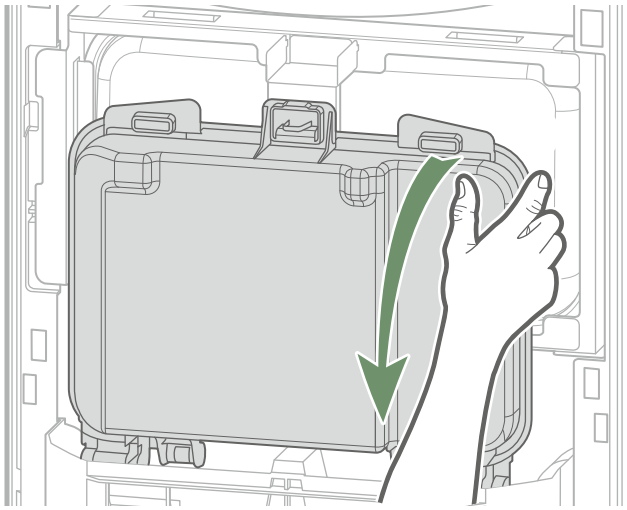

■ Accessing the Sensor Connectors

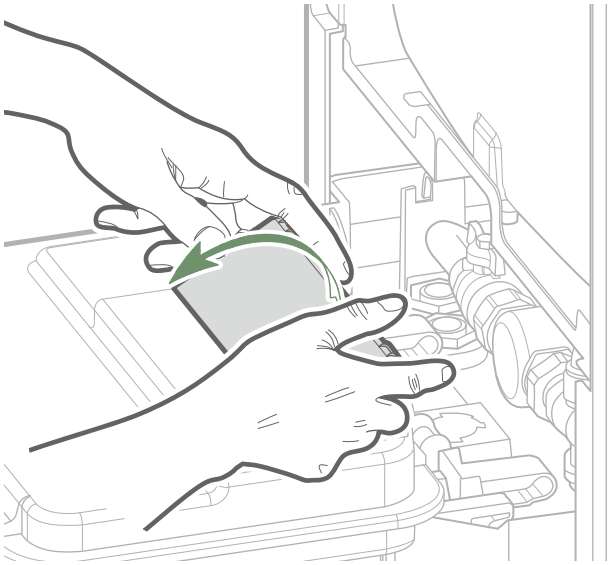

■ Accessing the supply terminal blocks

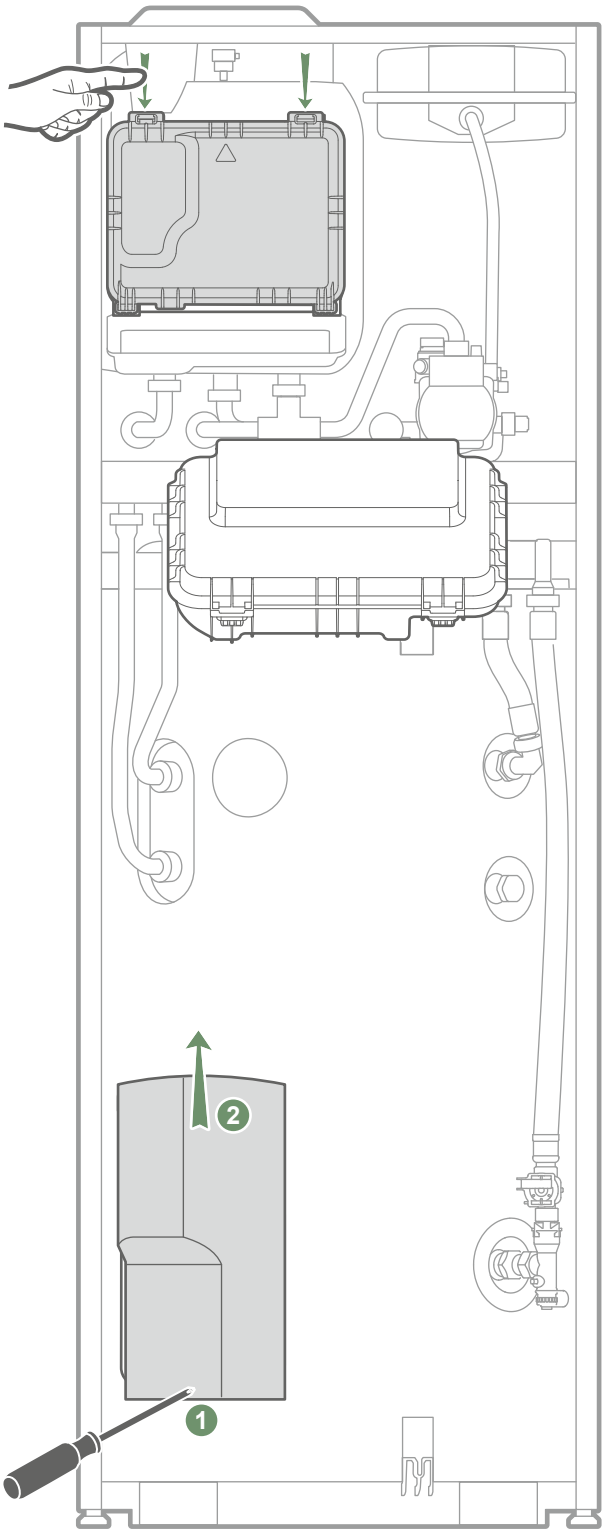

fig. 38 - Accessing the hydraulic unit terminal blocks

▼ Outdoor unit and hydraulic unit interconnection

Follow the correspondence between the terminal block markers on the hydraulic unit and the outdoor unit when connecting the interconnection cables.

⚠ **A connecting error may destroy one of the units.**

▼ Electrical heating backup

Connect the power supply to the heating backup.

- **6 kW backup**: 3G6 mm² cable minimum (phase, neutral, earth) up to the electrical panel. Protected by circuit-breaker [type C].

or

- **9 kW backup**: 4G2.5 mm² cable minimum (3 phases, earth) up to the electrical panel. Protected by circuit-breaker [type C].

▼ DHW electrical backup

Connect the power supply to the DHW electrical heater using a 3G1.5 mm² cable (phase, neutral, earth) up to the electrical panel.

Protected by circuit-breaker [16 A type C]

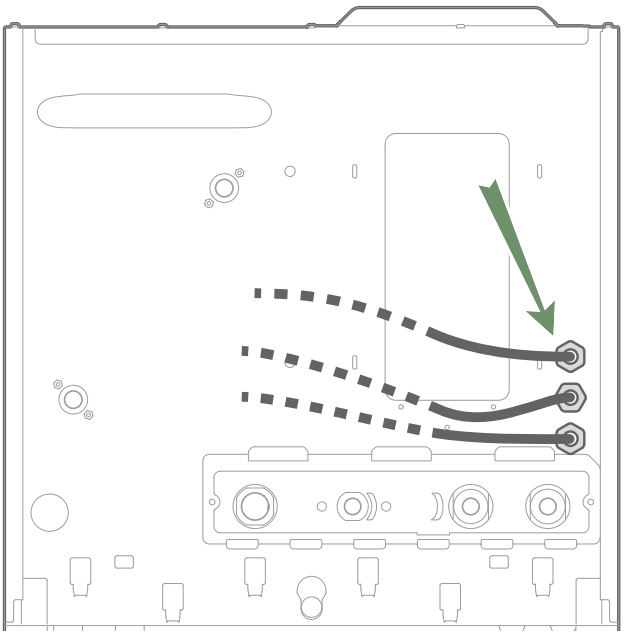

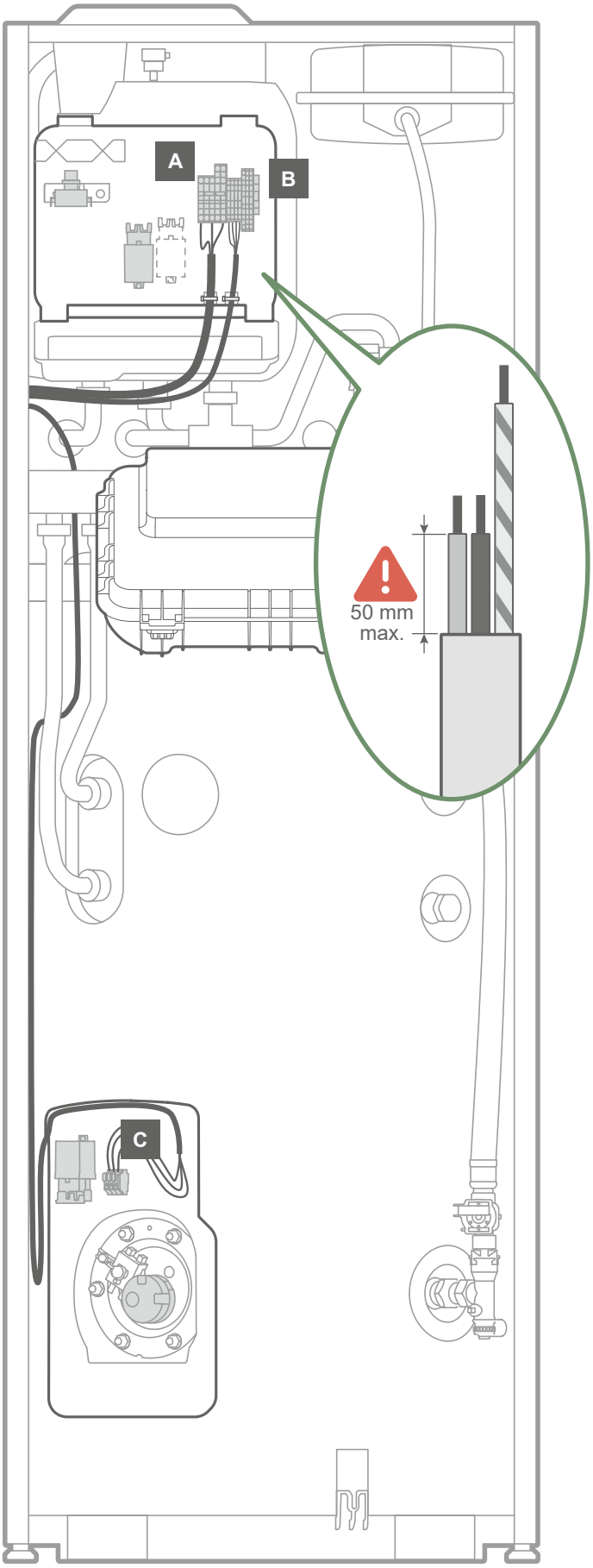

■ **Electrical heating backup cabinet terminal Single-phase models**

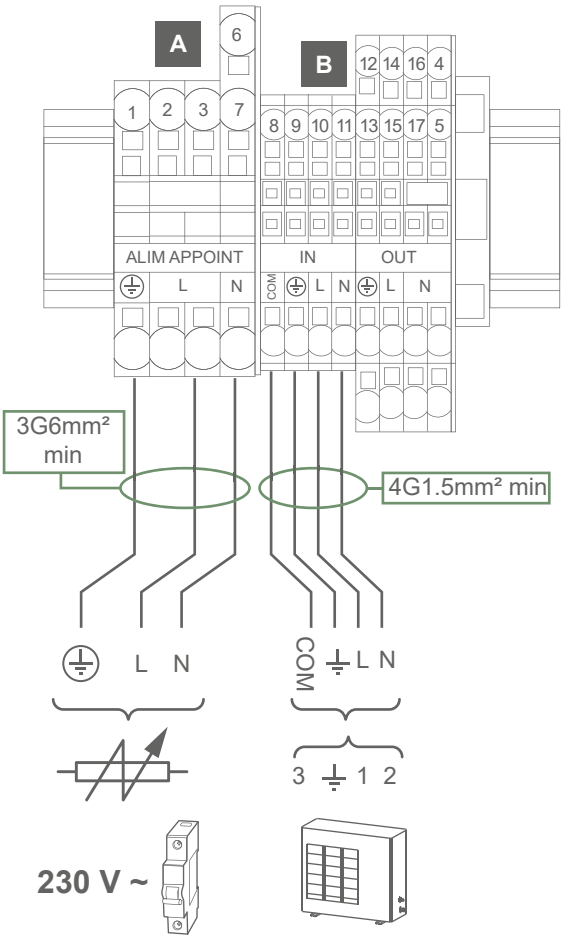

■ **Electrical heating backup cabinet terminal Three-phase models**

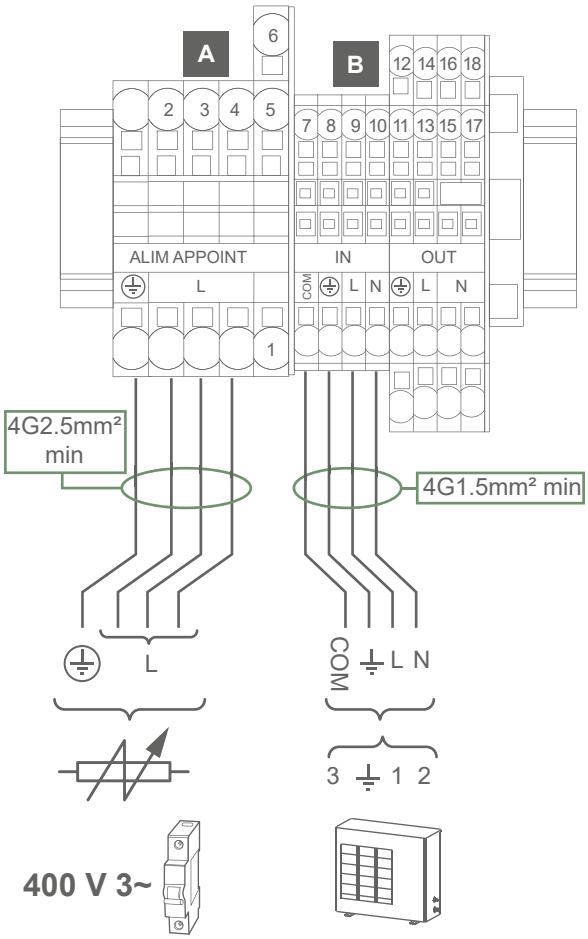

■ **DHW power supply cabinet terminal**

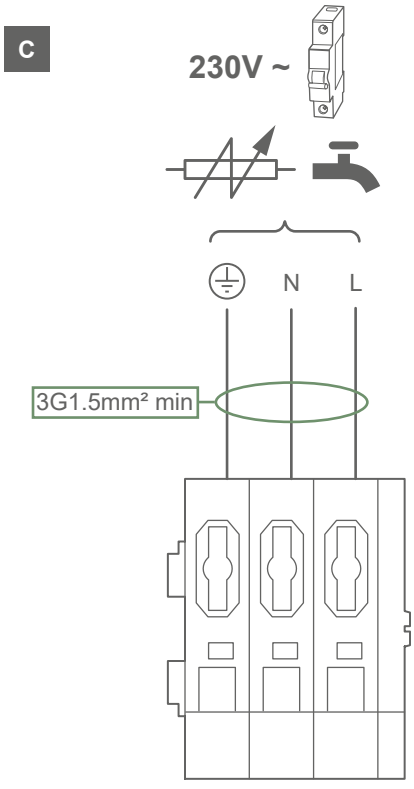

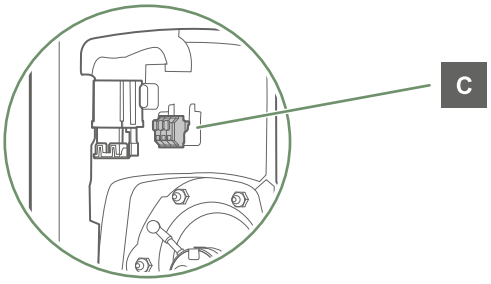

▶ Outdoor unit

To access the connection terminals:
- Remove the front panel.

Avoid any contact between the cables and the valves / refrigeration connections.

Use the cable ties to prevent any accidental disconnection of wires.

Fill in the space at the cable inlet in the outdoor unit using the insulating plate.

■ Side connection

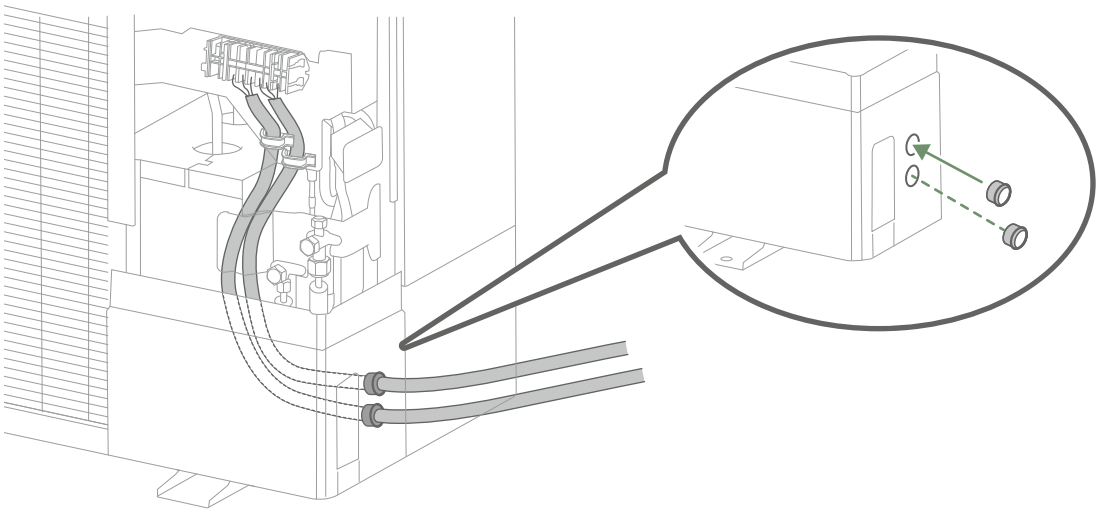

■ Back connection

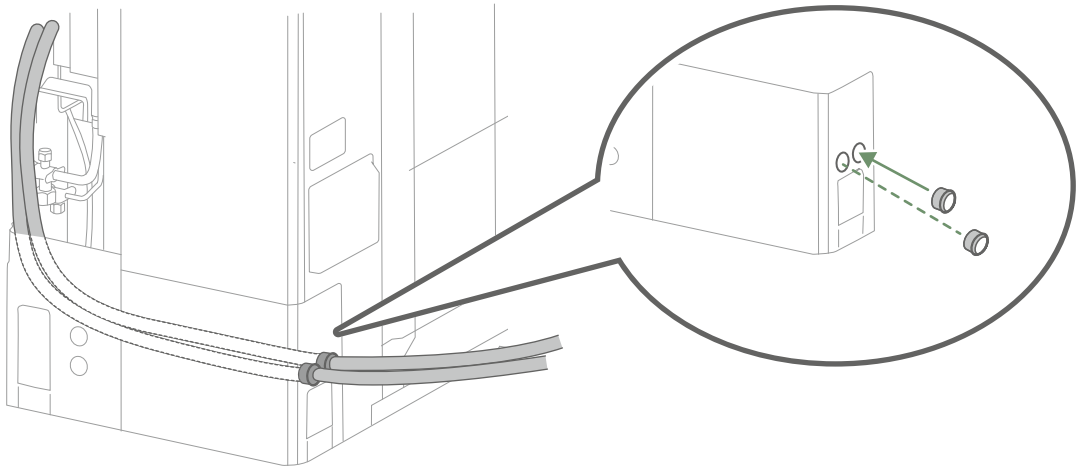

fig. 39 - Running the cables and installing the one contact gasket

▶ Outdoor unit electrical connection

■ Single-phase models

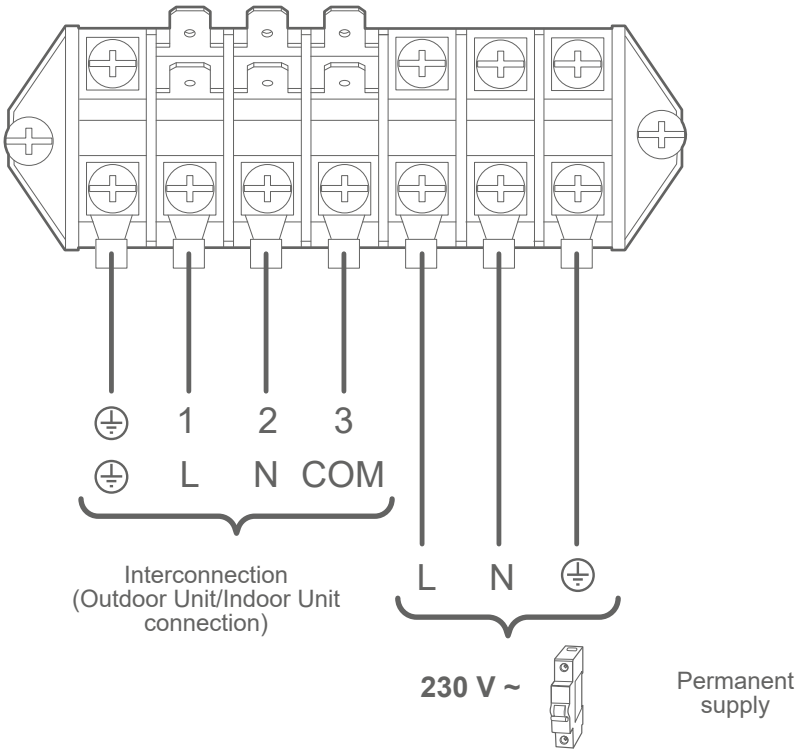

■ Three-phase models

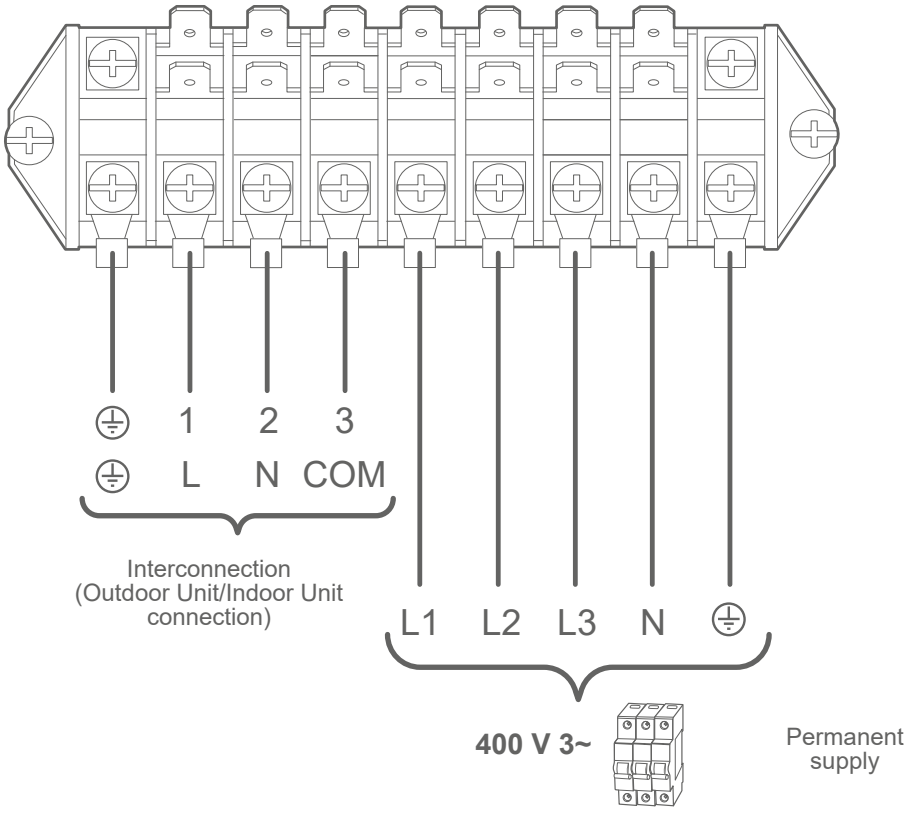

fig. 40 - Electrical connection terminals on the outdoor unit

▶ Options

▼ Second heating circuit

➔ Refer to the instructions supplied with the 2-circuit kit.

▼ Defects outside the heat pump

All information-reporting components (Safety of underfloor heating / ceiling heating systems, thermostat, pressure sensor, etc.) can indicate an external issue and stop the heat pump.

4 Connect the external component to the **Sensor Connector**

▼ Installing a room thermostat

➔ Refer to the instructions supplied with the room thermostat.

■ Thermostat 105

10 Room thermostat 1 (wired communication) on the **Sensor Terminal block**.

11 Room thermostat 2 (wired communication) on the **Sensor Terminal block**.

■ Thermostat 225

12 Supply $24V_{DC}$ wireless room thermostats (wired supply / radio communication) on the **Supply Terminal block**.

Fan convector zone

If the installation is equipped with fan convectors/ dynamic radiators, **do not use a room thermostat.**

▼ Outside sensor

➔ Refer to the instructions supplied with the outside sensor.

The outside sensor may be required for the heat pump to operate, particularly in the absence of a room thermostat.

Position the sensor on the least sunny facade, usually the north or north-west facade.

It must in no circumstance be exposed to the morning sun.

It should be installed so as to be easily accessible but should at least be 2.5 m from the ground.

Sources of heat must imperatively be avoided, which includes fireplaces, upper parts of doors and windows, extract units, underneath of balconies and roof dormers, which would isolate the sensor from outside air temperature variations.

8 Connect the outside sensor to the **Sensor Connector**

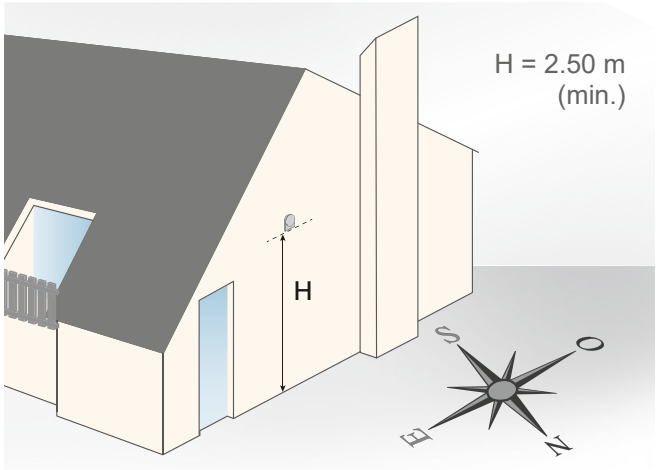

■ Sensor connector (Main box)



fig. 41 - Sensor connections

▼ Extension control board

➔ Refer to the instructions supplied with the extension control board.

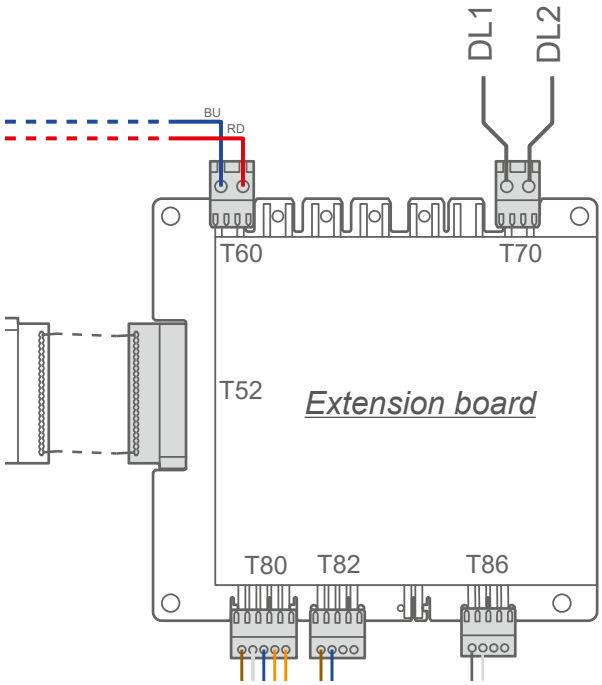

It is possible to link the operating of the heat pump to specific contracts, in order to produce domestic hot water (DHW) during the cheapest hours:

Off-peak hours

- Connect the “Energy supplier” contact to the **DL1 inlet of the T70 connector**.
- In the *Installed Options* menu, set the line “*Ext. inlet 1: Type of features*” to “*Off-peak hours*”.
- By default: 230V on DL1 = information “*Off-peak hours*” activated ➔ the production of DHW is done at the comfort setpoint.

PhotoVoltaics

- Connect the “Energy supplier” contact to the **DL1 inlet of the T70 connector**.
- In the *Installed Options* menu, set the line “*Ext. inlet 1: Type of features*” to “*PhotoVoltaics*”.
- By default: 230V on DL1 = information “*Photovoltaics*” activated ➔ the hot water tank electrical backup is activated up to 65°C.

Power limitation or EJP (Peak tariff days)

- Connect the power balancer to the **DL2 input of the T70 connector**.
- In the *Installed Options* menu, set the line “*Ext. inlet 2: Type of features*” to “*Power limitation*”.
- By default: 230V on DL2 = power limitation in progress ➔ the heat pump backups and DHW electrical heater are off. The heat pump is authorised or stopped according to the setting “*If instruction for Erasure / Power limitation*”.

Smart Grid

- Connect the 2 “Energy supplier” contacts to the **DL1** and **DL2 inlets of the T70 connector**.
- In the *Installed Options* menu, set the line “Ext. inlet 1: Type of features” to “*Smart Grid*”.
- By default, the behaviour in “*Smart Grid*” is as follows:

DL1	*DL2*	*Behaviour*
0V	0V	Normal
230V	0V	Same as *Power limitation*
0V	230V	Same as *Off-peak hours*
230V	230V	Activation of DHW boost

Control system interface

User interface

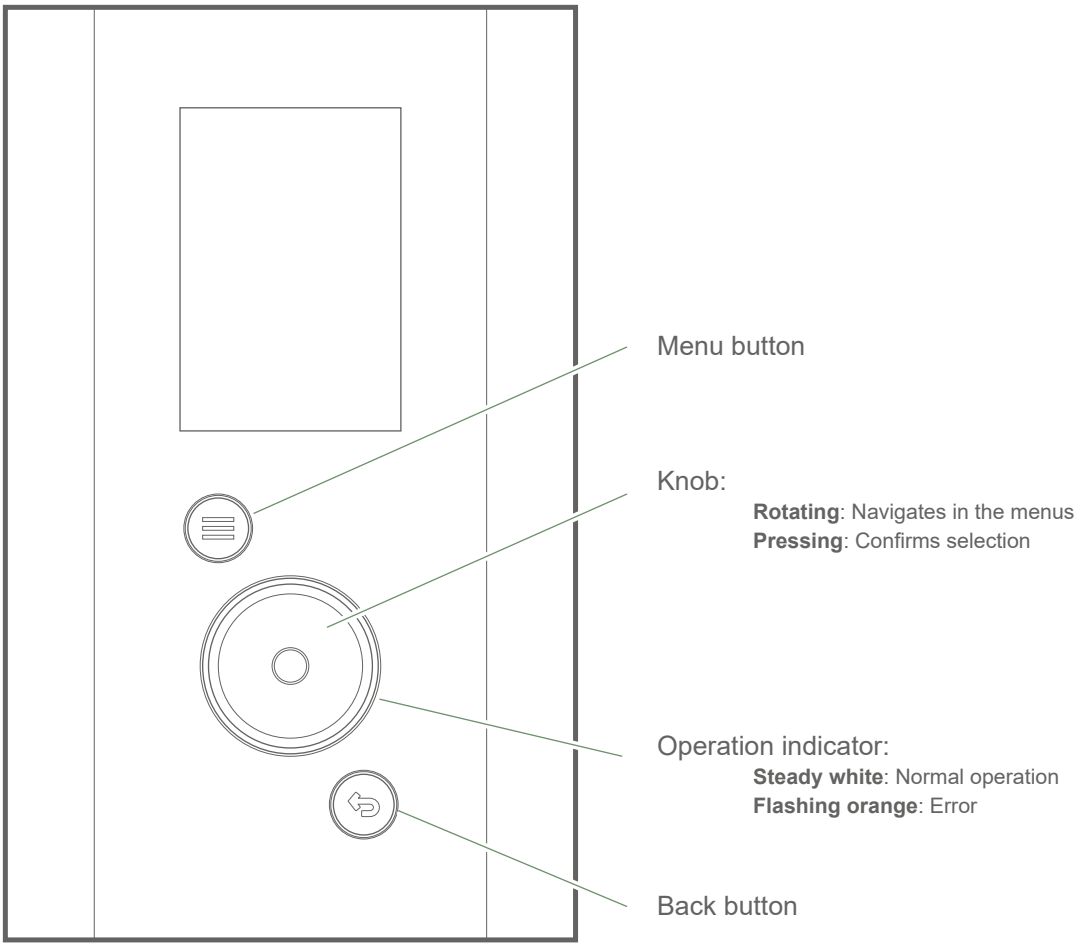

▶ Description of display

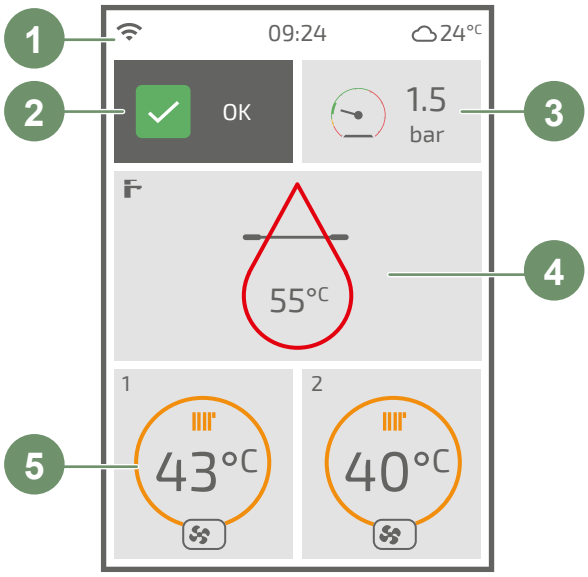

1

- Connectivity
- Attenuation mode
- Programmed away mode
- Emergency mode
- Outdoor temperature
- Installer menu

2

- Normal operation
- Caution
- Error

3

- Pressure indicator

4

- 55°C DHW setpoint
- Quantity of hot water remaining
- DHW activated
- Heating in progress
- (Grey) Off / Frost protection

5 43°C Flow temperature setpoint

Operation:

- (Orange) Heating
- (Grey) Off / Frost protection

Mode:

- Heating
- Away Mode
- Floor drying mode

Produced by:

- Heat pump
- Electrical backup
- Heat pump + Electrical backup
- Heat Pump + Backup Boiler
- Backup Boiler

Flow setpoint

▶ WITH a room thermostat

The heat pump operation is controlled by room thermostat.

The heating circuit water temperature setpoint is calculated by the thermostat and communicated to the heat pump.



Thermostat settings

• Heating settings

- Mode selection.
- Setting of room setpoints.
- Setting of time slots.

▶ WITHOUT a room thermostat

The heat pump operation is subject to temperature control.

The heating circuit water temperature setpoint is adjusted according to the outside temperature.

If the installation includes thermostatic valves, they must be open wide or set higher than the normal setpoint ambient temperature.

▼ Setting

Setting the heating flow setpoint

Setting is done directly via the interface.

Heating	Circuit 1	Heating

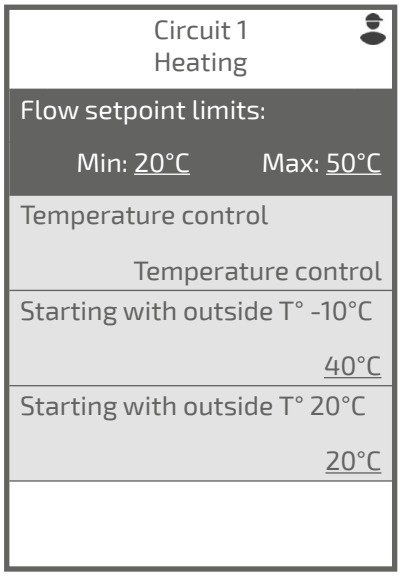

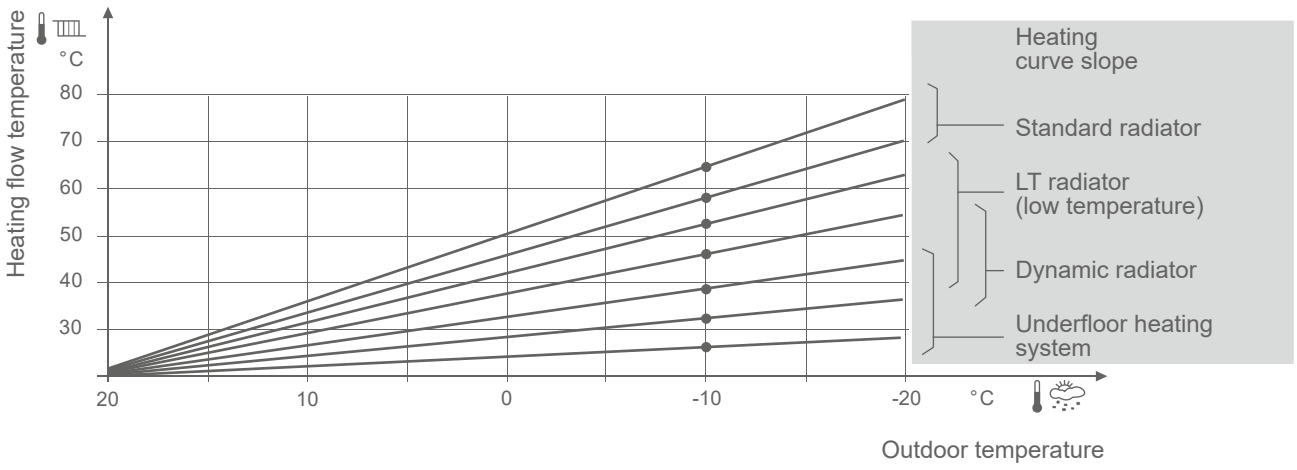

fig. 42 - Heating curve slope

Commissioning

▶ Pre-commissioning checks

• **Hydraulic circuit**

- Make sure the installation has been flushed.
- Check the direction of water circulation and check all valves are open.
- Check the entire installation for leaks.

• **Electrical circuit**

- Check compliance of the power supply phase-neutral polarity.
- Check all equipment is connected to the suitable connection terminals.

▶ First commissioning

- Switch on the installation's main circuit breaker.

  Upon first commissioning (or in winter), switch on the installation's main circuit breaker (outdoor unit supply) a few hours before the tests, to allow for compressor pre-heating.

Upon commissioning and every time the main circuit breaker is switched off and then back on, the outdoor unit will need approximately 4 min. to start even if the control system is set to heating.

If commissioning takes place in cold weather (hydraulic temperature under 17°C), the electrical backup is used on its own to preheat the hydraulic circuit (the outdoor unit is not used).

Upon the first use, there might be a slight smell of hot plastic.

▶ Easy Start

Select language, set the date and time.

Answer Easy Start questions.

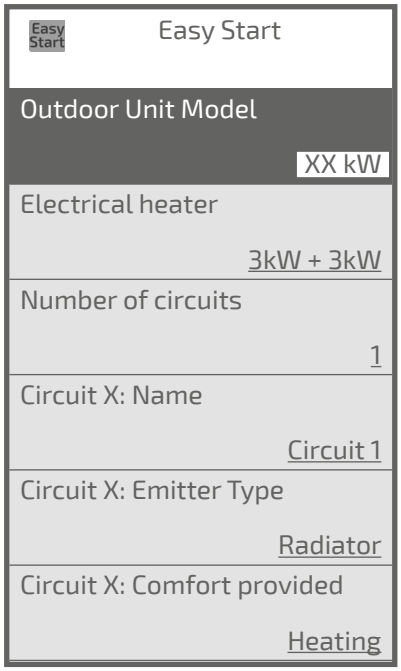

▶ Hydraulic unit purge

Upon commissioning, the circulation pump and the directional valve start up in order to purge the installation automatically (heating and domestic water circuits).

The user interface displays the remaining purge time.

This cycle must never be interrupted (During the purge cycle, the circulation pump alternates between 5-second operating phases and shutdown phases (5 s operation, 5 s shutdown...). The valve alternates every 30 seconds between the heating circuit and the DHW circuit).

- Open all drain valves in the installation to evacuate the air in the pipes.
- Add water until the hydraulic circuit pressure reaches 1.5 bar.

The precise filling pressure is determined according to the installation height.

- Check for any leaks.

To start a new automatic purge cycle:

Additional functions | **Air purge cycle**

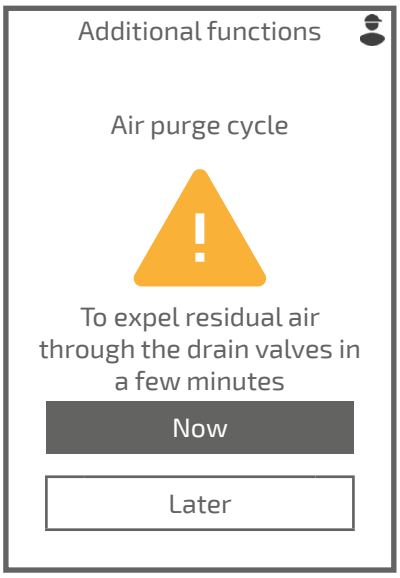

Control system menu

Menu organisation

- Installer menu
  - Active Functions
  - Installed Options
  - Domestic Hot Water
    - On a daily basis
    - Antilegionella
  - Heating
    - Circuit
    - Thresholds in Auto
  - Heat Pump
    - Compressor
    - DHW production
    - Electrical heater
    - Circulation pumps
  - Additional functions
    - Attenuation mode
    - Air purge cycle
    - Floor drying mode Circuit
  - Radio Network
    - Add Thermostat
    - Add Repeater
    - Advanced Commands
      - Zigbee code
      - Features
      - Add another device
    - Reset Network
  - Diagnosis
    - Error history
    - Indoor unit
      - General
      - Circuit
      - Domestic hot water
      - External inputs
    - Outdoor unit
    - Outdoor unit test
    - Actuators test
    - Operation counters
    - Serial numbers
    - Factory reset

Default settings are underlined in the explanations.
Values shown on the screens are provided as examples and are non contractual.

▶ Active Functions

Active Functions

On the *Active Functions* page, you can check operating functions and change their status.

- ***Domestic Hot Water:***
  On / Off
- ***Circuit 1 / 2 :***
  On / Off /
- ***Emergency mode:***
  Enabled / Inactive

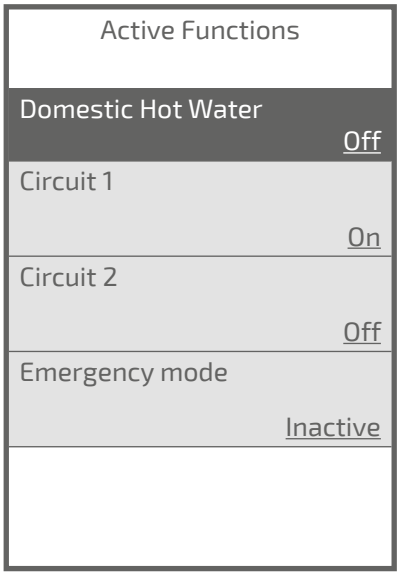

Installed Options

The installed options are set upon commissioning. However, they can be modified in the *Installed Options* menu.

- ***Outdoor Unit Model:***
  __ kW ... 1 kW... 9 kW... 17 kW
- ***Hot Water Option:***
  Yes */ No*
- ***DHW electrical heater:***
  None / 0.0kW.. 1.2 kW ... 10 kW
- ***Electrical heater:***
  None / 3kW + 3kW / 9kW / Backup boiler
  Default value
  Single-phase model: 3kW + 3kW
  Three-phase model: 9 kW
- ***Number of circuits:***
  1 / 2
- ***Circuit X: Name:***
  Circuit 1 / Day / Night / Ground floor / Upper floor / Living areas / Bedrooms
- ***Circuit X: Emitter Type:***
  Radiators / Floor / Ceiling / Fan convector
- ***Decoupling***
  Yes / No
- ***Outdoor temperature:***
  (Information according to the outside sensor location)
  From Outdoor unit / From remote sensor
- ***Safety input:***
  Normally Open / Normally Closed
- ***Ext. inlet 1: Type of features:***
  None / Off-peak hours / PhotoVoltaics / Smart Grid
- ***Ext. inlet 2: Type of features:***
  None / Power limitation
- ***Save***

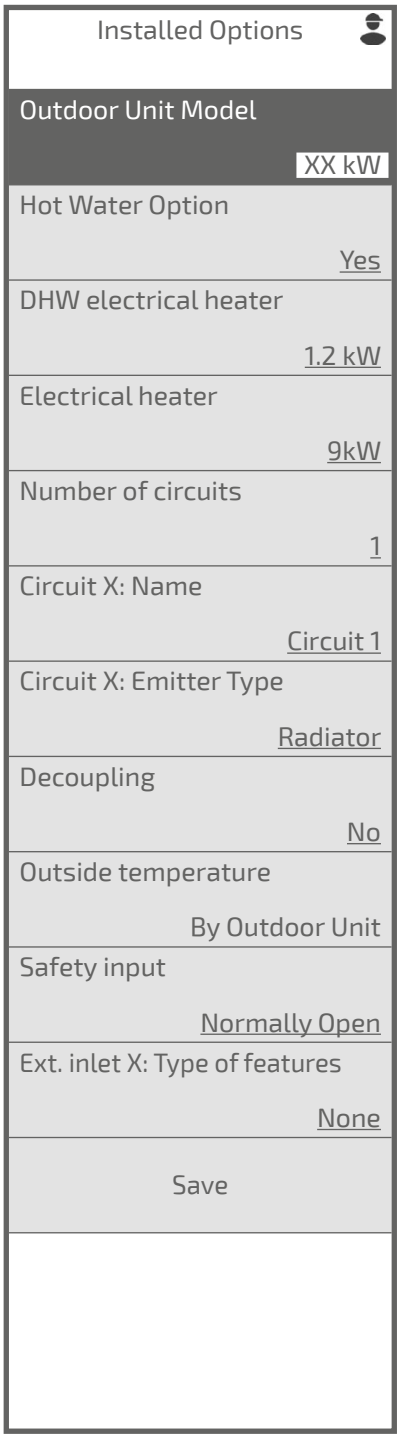

▶ Domestic Hot Water

Domestic Hot Water | **On a daily basis**

- ***Heating mode:***
  Comfort: provides maximum comfort with a large quantity of hot water at all times.
  Eco: guarantees maximum energy saving while ensuring domestic comfort and heating.
- ***Temperature:***
  47°C ... 55°C ... Max. temperature
- ***Max. temperature:***
  Temperature... 65°C
- ***Forced load:***
  Auto / Manual
- ***Forced load 1 / 2:***
  Set time

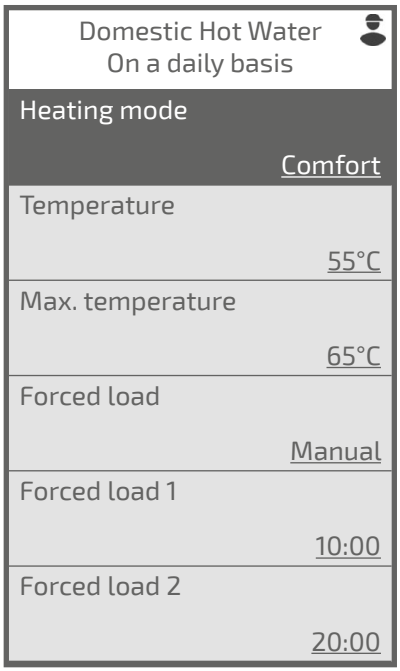

Domestic Hot Water | **Antilegionella**

- ***Weekly protection:***
  Enabled / Inactive
- ***Time of cycle:***
  Set day and time
- ***Temperature:***
  45°C... 60°C ... 65°C

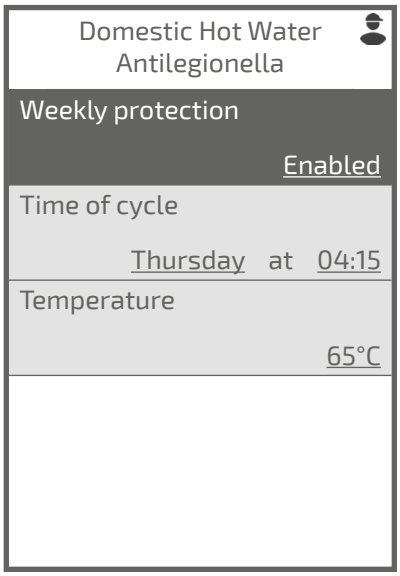

▶ Heating

Heating	Circuit 1	**Heating**

- ***Flow setpoint limits:***
  Min.: *20°C* ... 30°C
  Max.: 30°C... *80°C*
- ***Temperature control:*** *(View Temperature control)*
  Temperature control
- ***Starting with outside T° -10°C:***
  Starting with outside T° 20°C ... *65°C*... 80°C
- ***Starting with outside T° 20°C:***
  10°C ... *20°C*... *Starting with outside T° -10°C*

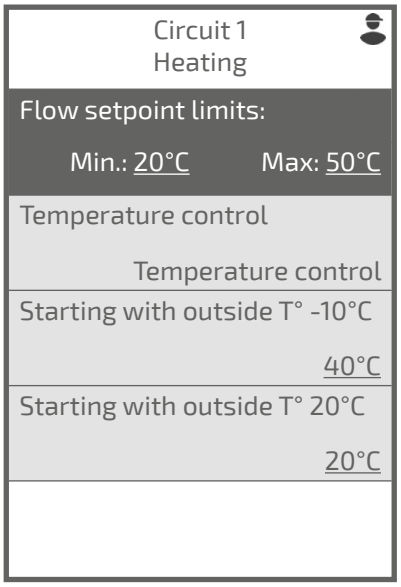

Heating	Circuit 2	**Heating**

- ***Flow setpoint limits:***
  Min.: *20°C* ... 30°C
  Max.: 30°C... *80°C*
- ***Temperature control:*** *(View Temperature control)*
  Temperature control
- ***Starting with outside T° -10°C:***
  Starting with outside T° 20°C ... *35°C*... 80°C
- ***Starting with outside T° 20°C:***
  10°C ... *20°C*... *Starting with outside T° -10°C*
- ***Mixing valve correction:***
  0°C ... 20°C

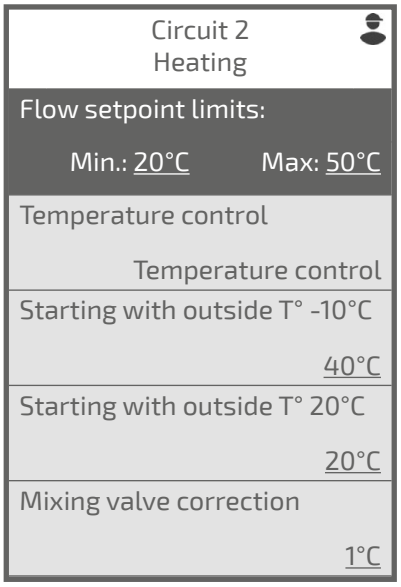

▶ Heat Pump

Heat Pump	**Compressor**

- ***Minimum off time:***
  3 min. ... *8 min.* ... 20 min.
- ***Overrun:***
  10 s ... *30 s* ... 600 s

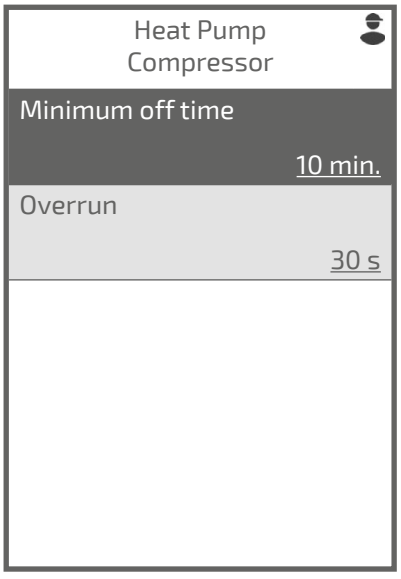

Heat Pump

DHW production

- ***Max. DHW charging time:***
  90 min. ... *120 min.* ... 180 min.
- ***Heating/Cold return:***
  10 min. ... *90 min.* ...180 min.

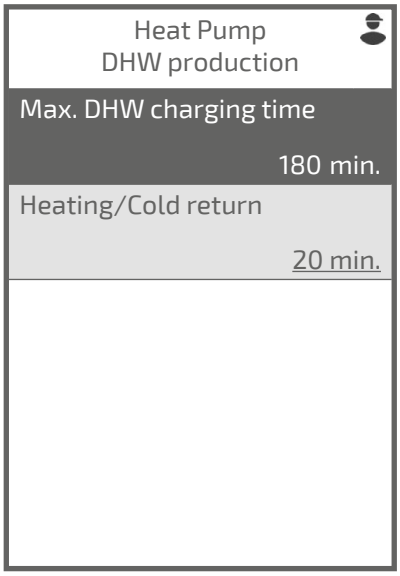

Heat Pump

Electrical heater

- ***Allowed if outside T° <:***
  Always allowed / -15°C ...2°C ... 10°C
- ***Switching threshold:***
  0°C min. ... *100°C min.* ... 500°C min.

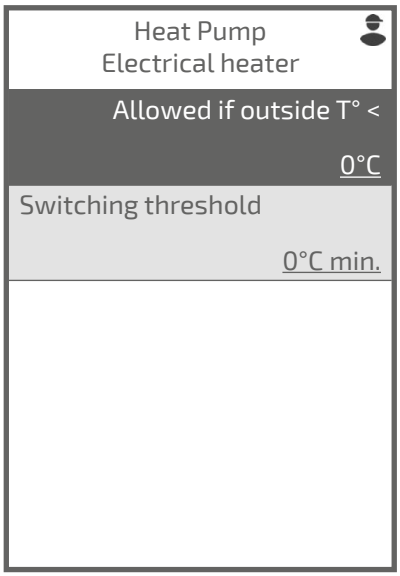

Heat Pump

Circulation pumps

- ***System pump speed:***
  30% ... 100%
- ***Circulation pump speed Circuit 2:***
  50% ... 100%

If the hydraulic flow is too low, the hydraulic unit circulation pump speed is likely to increase automatically to maintain a sufficient flow.

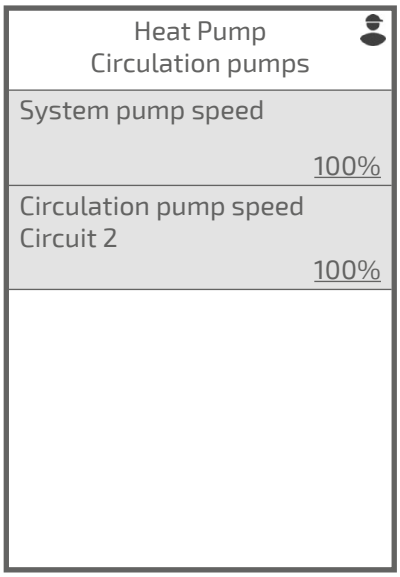

▶ Additional functions

Additional functions — Attenuation mode

- ***Compressor limitation:***
  Enabled / Inactive
- ***Max. allowed speed:***
  10% ... *60%* ... 95%
- ***Active as:***
  Outside T° > -15°C ... *5°C* ... 10°C
- ***Period 1 / 2 / 3:***
  Period 1: from 00:00 to 12:00
  Period 2: from 12:00 to 00:00
  Period 3: --

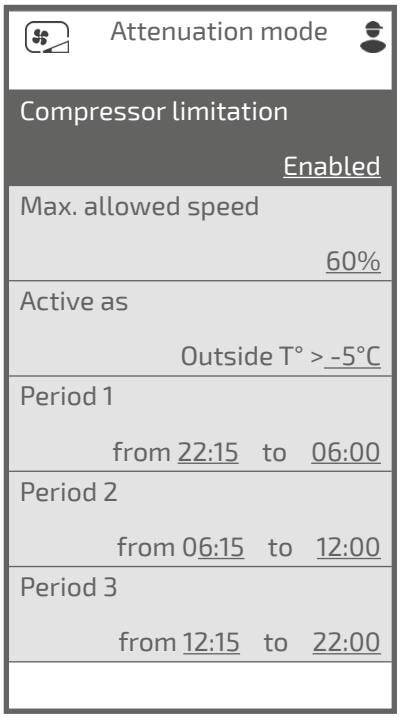

Additional functions — Air purge cycle

The air purge cycle lasts approximately 4 minutes. Never interrupt this cycle.
(During the purge cycle, the circulation pump alternates between 5-second operating phases and shutdown phases (5 s operation, 5 s shutdown...). The valve alternates every 30 seconds between the heating circuit and the DHW circuit).
Open all drain valves in the installation to evacuate the air in the pipes.

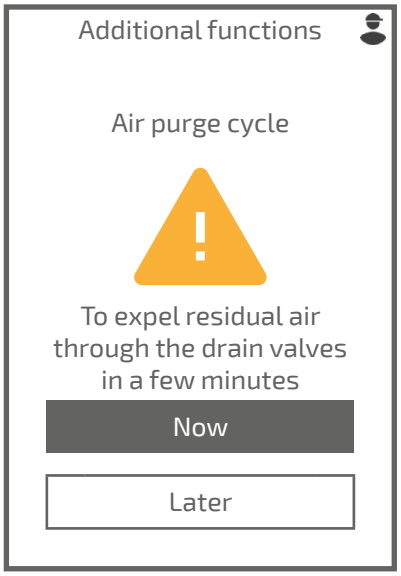

Additional functions — Floor drying mode Circuit 1 / 2

- ***Drying:***
  Off / Manual for 25 days / Progressive 18d + Shock 7d / Shock 7d + Progressive 18d / Progressive 18d / Shock 7d
- ***Flow temperature:***
  20°C... *25°C* ... 55°C

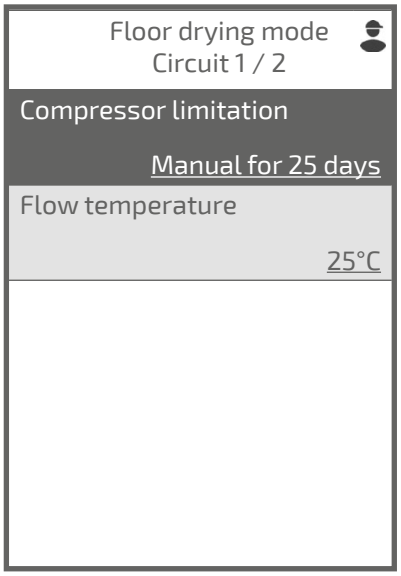

▶ Radio Network

Radio Network | **Add Thermostat**

➔ Check the room sensor installation manual.

- ***Circuit 1:***
  Add here
- ***Circuit 2:***
  Add here

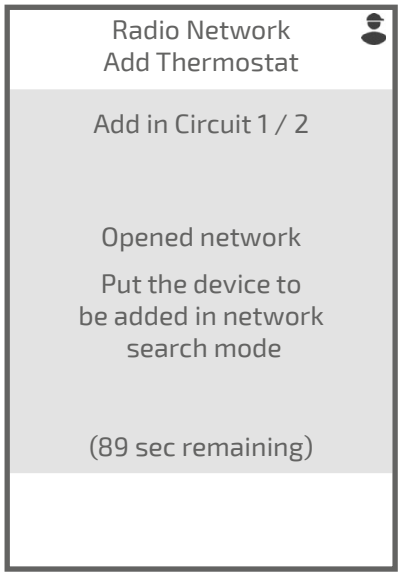

Radio Network | **Add Repeater**

Install repeater midway between the appliance and the Thermostat

➔ View repeater manual

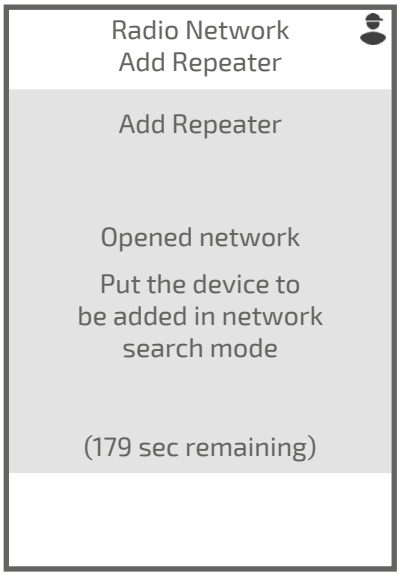

Radio Network | Advanced Commands | **Zigbee code**

Provides the status and technical information of the Radio network.



Radio Network | Advanced Commands | **Features**

Provides the status and technical information of the Radio network.

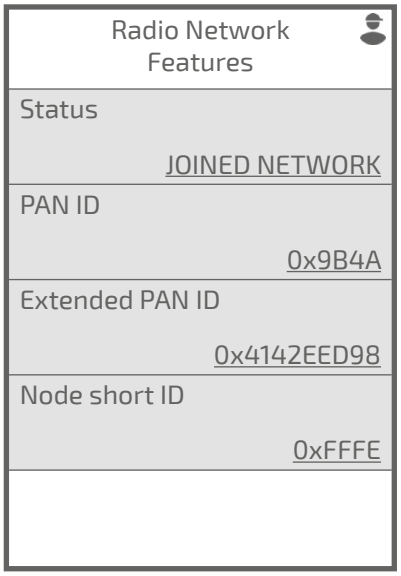

Radio Network | Advanced Commands | **Add another device**

- ***Circuit 1:***
  Add here
- ***Circuit 2:***
  Add here

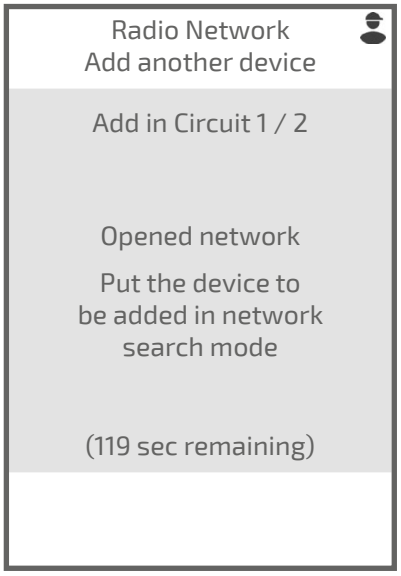

Radio Network | **Reset Network**

Resetting cancels all pairings.

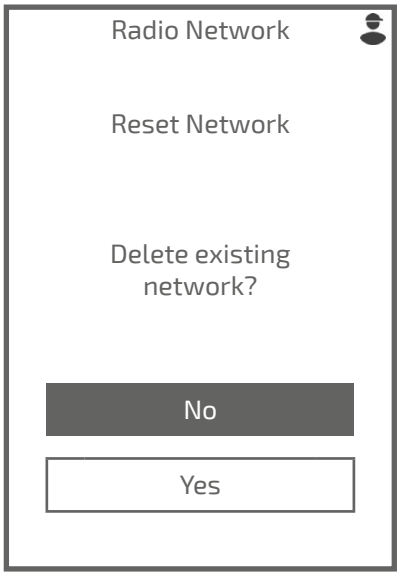

▶ Diagnosis

Diagnosis | **Error history**

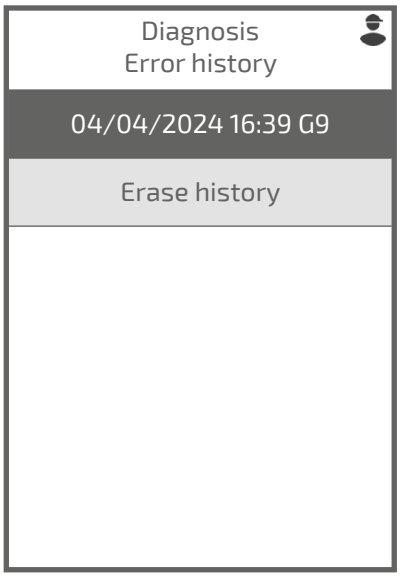

Diagnosis | **Indoor unit**

Used to view status of the different features.

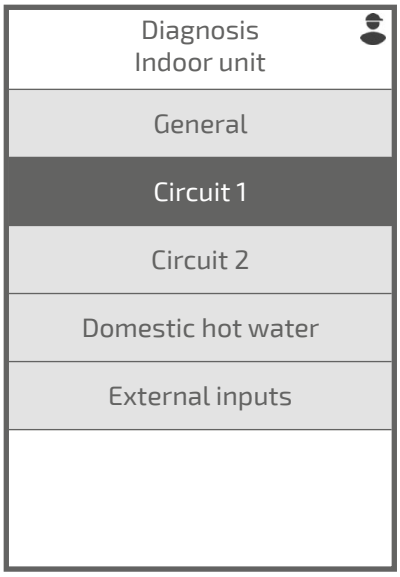

Diagnosis | **Outdoor unit**

Used to view status of the different features.

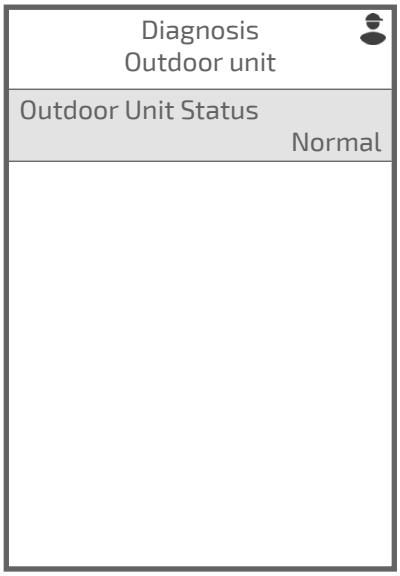

- ***Compressor modulation:***
  Off / 7% ...100%
- ***Directional valve***
  ***Heating position** / Middle position / DHW position*
- ***System pump***
  Off / 30% ... 100%
- ***System pump flow***
  ...
- ***Flow temperature***
- ***Return temperature***
- ***Exchanger temperature***
- ***Tank temperature***
- ***Flow temperature Circuit 2***

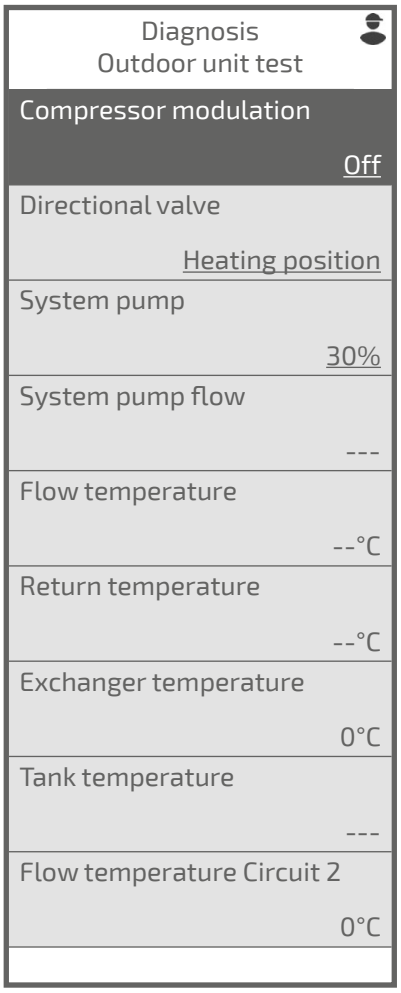

- ***System pump:***
  Off / 30% ...100%
- ***System pump flow:***

- ***Electrical heater:***
  Off / On
- ***Flow temperature:***
- ***Return temperature:***
- ***Circulation pump speed Circuit 2:***
  Off / 10% ...100%
- ***Mixing valve Circuit 2:***
  Closed / 10% ...100%
- ***Flow temperature Circuit 2:***
- ***DHW electrical heater:***
  Off / On
- ***Directional valve:***
  Heating / Middle position / Domestic Hot Water
- ***Tank temperature:***

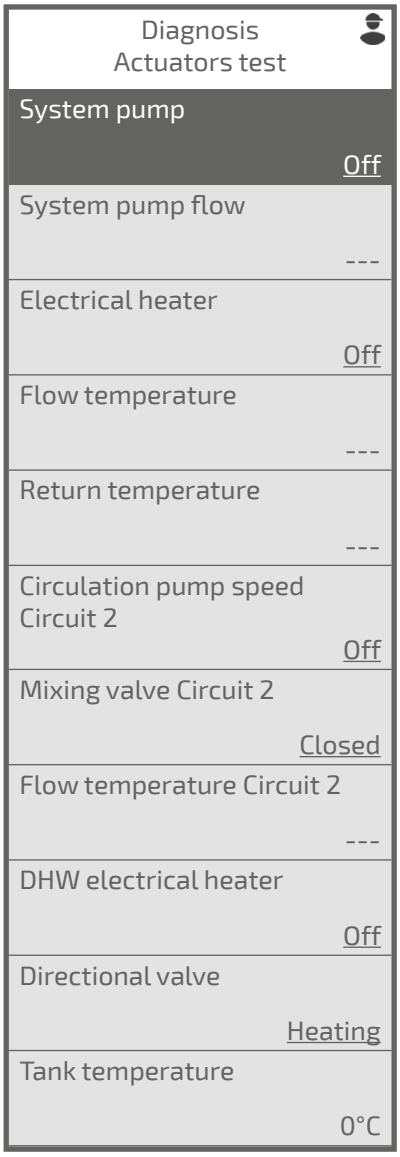

Diagnosis **Operation counters**

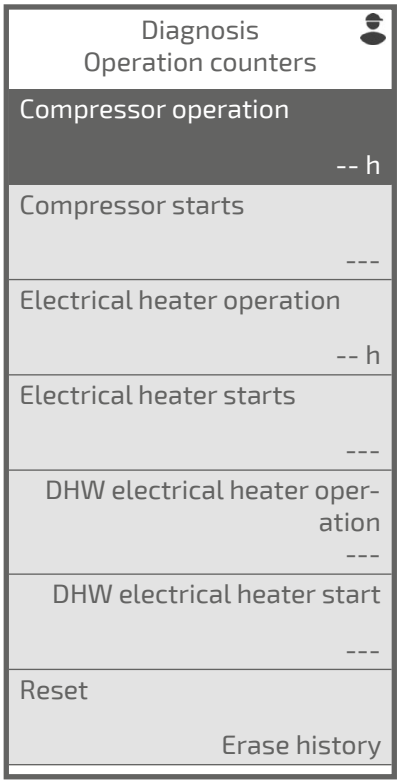

Diagnosis **Serial numbers**



Diagnosis **Factory reset**

Factory settings, which are memorised in the regulator, shall cancel and replace any personalised programmes.

Any personalised settings will be lost.

Back to Easy Start.



Failure diagnosis

Hydraulic unit errors

Error	Designation	Probable causes	Proposed actions
3	Room temperature measurement error (thermostat)	If 2 thermostats: loss of communication on 1 thermostat. Poor radio signal quality	Check the radio signal quality of all thermostats.
10	Communication error with control board.	Connection loss between the regulator and the display	Check wiring between T24 and display.
13	Communication error with room thermostat	Connection loss between the display and the thermostat	Check the thermostat wiring or batteries. Check the thermostat radio range.
G1	Outside temperature sensor fault.	Connection loss between the regulator and the outdoor unit	Check wiring between T26 and interface card.
G2	External safety input.	Activation of external safety	-
G6.XX	Outdoor unit error.	View details in “Outdoor unit errors”	-
G7	Flow sensor fault.	Short-circuit. Sensor unplugged or disconnected. Faulty sensor. Other defect.	Check sensor wiring. Replace the sensor.
G8	Flow sensor fault.		
G9	Faulty water pressure sensor.		
G11	Water pressure too low.	Lack of water in the circuit.	Add water in the circuit.
G12	Water pressure too high.	Too much water in the circuit.	Empty a little water from the circuit.
G13	Low water pressure	Slight lack of water in the circuit	Complete the water level
G14	System pump fault.	Lack of water in the circuit. Circulation pump undervoltage.	Complete the water level. Check system pump power supply.
G15.XX	System pump fault.	System pump fault. View details in “Circulation pump errors”	Check circulation pump wiring. Replace the circulation pump
G16	Faulty directional valve.	Faulty directional valve.	Check valve wiring. Replace the valve.
G17	System pump flow too low	Thermostatic valves closed. Soiling. Faulty pump.	Check the installation valves are open. Check the hydraulic unit pump.
G18	Circuit 2 flow sensor fault.	Short-circuit. Sensor unplugged or disconnected. Faulty sensor. Other defect.	Check sensor wiring. Replace the sensor.
G22	DHW sensor fault.		
G26	System pump flow too low	DHW tank soiling. Faulty pump.	Check the installation valves are open. Check the hydraulic unit pump.
G27	Anti-legionella cycles too long.	Anti-legionella temperature setpoint not reached.	Check DHW electrical heater wiring.
G29	Outdoor unit communication lost.	Connection loss between the regulator and the outdoor unit.	Check wiring between T26 and interface card.
G30	Room thermostat circuit 1 communication lost.	Wiring problem between room sensor and regulator.	Check wiring.
G31	Room thermostat circuit 2 communication lost.		
G33	HMI communication lost.	Loss of connection between control board and user interface	Check the wiring between T24 of the control board and the user interface
G34			
G35			
G45	Remote outside temperature sensor lost.	Short-circuit. Sensor unplugged or disconnected. Faulty sensor. Other defect.	Check sensor wiring. Replace the sensor.
G46	System pump communication lost	Short-circuit. Circulation pump unplugged. Circulation pump faulty.	Check circulation pump wiring (communication and power supply) Replace the circulation pump.
G54	Circuit 3 flow sensor fault	Short-circuit. Sensor unplugged or disconnected. Faulty sensor. Connection to extension board. Other defect.	Check sensor wiring. Replace the sensor. Check extension board wiring.
G55	System pump flow too low	Thermostatic valves closed. Soiling. Faulty pump.	Check the installation valves are open. Check the hydraulic unit pump.
G56	System pump flow too low	Thermostatic valves closed. Soiling. Faulty pump.	Check the installation valves are open. Check the hydraulic unit pump.

▶ Outdoor unit errors

■ Added error code (G6.XX) visible on the display unit and/or error codes on the interface card (indoor unit).

x N: The indicator flashes N times

Display	Error	Interface card		Error wording
Item Error (G6.XX)		Green LED	Red LED	
0	11	x 1	x 1	Serial communication error after operating.
1		x 1	x 1	Serial communication error during operation.
2	42	x 4	x 2	Condensation sensor error
21	23	x 2	x 3	Different combination between indoor and outdoor unit.
22	32	x 3	x 2	UART communication control error
21	62	x 6	x 2	Communication error in the outdoor unit.
21	65	x 6	x 5	IPM error.
5	71	x 7	x 1	Error on discharge temperature sensor.
6	72	x 7	x 2	Error on compressor temperature sensor.
7	73	x 7	x 3	Error on heat-exchange thermistor (intermediate).
8		x 7	x 3	Error on heat-exchange thermistor (outlet).
9	74	x 7	x 4	Error on outdoor temperature sensor.
13	84	x 8	x 4	Error on current probe.
14	86	x 8	x 6	Error on high switch sensor.
		x 8	x 6	Error on pressure sensor.
15	94	x 9	x 4	Activation detection.
16	95	x 9	x 5	Error detected in the position of the compressor rotor.
17	97	x 9	x 7	Error on outdoor unit fan.
18	A1	x 10	x 1	Discharge temperature protection.
19	A3	x 10	x 3	Compressor temperature protection.
20	A5	x 10	x 5	Abnormally low pressure.
3	63	x 6	x 3	Inventer error
10	77	x 7	x 7	Heat sink thermistor (inverter) error
21	AC	x 10	x 11	Heat sink temperature

▶ Circulation pump errors

Display	Error wording
Error code (G15.XX)	
35	Air inside the circuit
40	Undervoltage
51	Blocked rotor
57	Dry start
75	Undervoltage
200	Electric fault

▶ Outdoor unit error codes

When an error is detected:
- The “ERROR” LED (2) flashes.
- Press “ENTER” once (S132).
- The LEDs flash (L1 & L2) several times depending on the type of error (view table below).

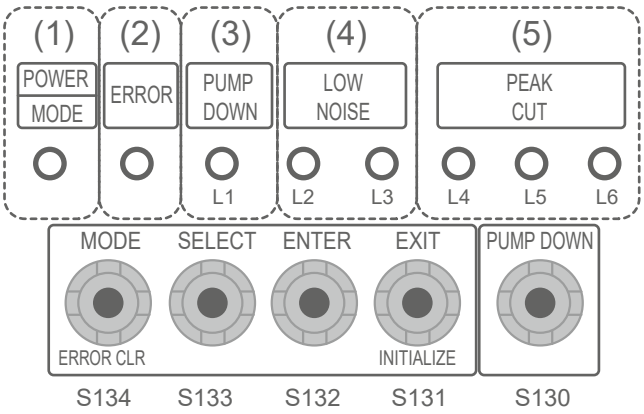

o: Indicator off; ●: Indicator on

Error description	*Outside unit board*						*Error wording*
	(L1)	*(L2)*	*(L3)*	*(L4)*	*(L5)*	*(L6)*	
Serial communication	*1*	*1*	O	O	●	●	Serial transmission error received immediately after operation
	1	*1*	O	●	O	O	Serial transmission error received during operation
Combination	*2*	*3*	O	O	O	●	Different combination between indoor and outdoor unit
	2	*3*	O	O	●	O	
Outside unit main board	*6*	*2*	O	O	O	●	Information error on model of outdoor unit printed circuit board
	6	*2*	O	O	●	O	Communication error in the outdoor unit
Inverter board	*6*	*3*	O	O	O	●	Inverter error
IPM	*6*	*5*	O	O	O	●	Temperature error
	6	*5*	O	O	●	●	Terminal error activation
Discharge temperature sensor	*7*	*1*	O	O	O	●	Error on discharge temperature sensor
Compressor temperature sensor	*7*	*2*	O	O	O	●	Error on compressor temperature sensor
Exhaust thermal sensor	*7*	*3*	O	O	●	O	Error on central exhaust temperature sensor
	7	*3*	O	O	●	●	Error on outdoor unit fluid exhaust thermal sensor
Outside sensor	*7*	*4*	O	O	O	●	Error on outdoor temperature sensor
Radiator sensor	*7*	*7*	O	O	O	●	Error on outdoor unit radiator sensor temperature
Compressor	*8*	*4*	O	O	O	●	Error on compressor current.
Pressure sensor	*8*	*6*	O	●	O	O	Error on high switch sensor
	8	*6*	O	●	●	O	Error on pressure sensor
Activation	*9*	*4*	O	O	O	●	Activation detection
Motor check	*9*	*5*	O	O	O	●	Detection error on rotor position (permanent interruption)
Fan motor	*9*	*7*	O	O	●	O	Error on outdoor unit DC 1 fan motor
Temperature	*10*	*1*	O	O	O	●	Error on discharge temperature
	10	*3*	O	O	O	●	Error on compressor temperature
Pressure	*10*	*5*	O	O	O	●	Abnormally low pressure
Cooling source	*10*	*11*	O	O	●	●	Error on cooling source temperature

Maintenance

Before any intervention, make sure <u>all power supplies</u> are disconnected.

Stored energy: after cutting off the power supplies, wait 10 minutes before accessing the inside of the equipment.



➔ View maintenance document supplied with the appliance.

▶ Hydraulic checks

If fillings are frequently required, it is imperative to check for any leaks. If a filling and a pressure reset are required, check the type of fluid initially used.

Recommended filling pressure: between 1 and 2 bar (the precise filling pressure is determined according to the installation height).

Annexes

▶ Filling with gas procedure

This procedure is restricted to installation engineers who comply with the legislation on the handling of refrigerants.

⚠ **Suction evacuation with a calibrated vacuum pump is imperative (view ANNEX 1).**

Never use equipment which has been previously used with a refrigerant other than HFC.

Do not remove the refrigeration circuit plugs until you proceed with the refrigeration connections.

⚠ **If the outdoor temperature is below +10°C:**

- The method used must imperatively be the triple vacuum technique (view ANNEX 2).
- It is recommended to install a dehydrating filter (and strongly recommended in temperatures below +5°C).

ANNEX 1

Calibration and control method for a vacuum pump

- Check the oil level of the vacuum pump.
- Connect the vacuum pump to the vacuum gauge following the diagram.

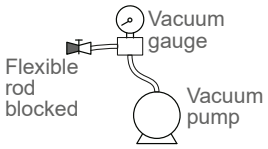

- Evacuate the suction during 3 minutes.
- After 3 minutes, the pump reaches its vacuum threshold and the vacuum gauge needle stops moving.
- Compare the pressure with the value in the table. Depending on the temperature, the pressure must be below the value indicated in the table.

  => If this is not the case, replace the gasket, the flexible rod or the pump.

T °C	5°C<T<10°C	10°C<T<15°C	15°C < T
Pmax - bar - mbar	0.009 9	0.015 15	0.020 20

ANNEX 2

Triple vacuum technique

- Connect the high-pressure flexible rod of the *Manifold* to the load inlet (gas connection). A valve must be mounted on the vacuum pump flexible rod to insulate it.

a) Evacuate the suction until you reach the required value and maintain during 30 mn (view table in ANNEX 1),

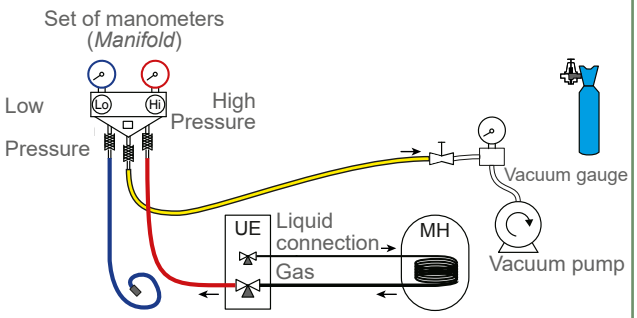

b) Switch off the vacuum pump, close the valve at the end of the yellow flexible rod, connect this flexible rod to the nitrogen bottle reducer, inject 2 bar, close the flexible rod valve,

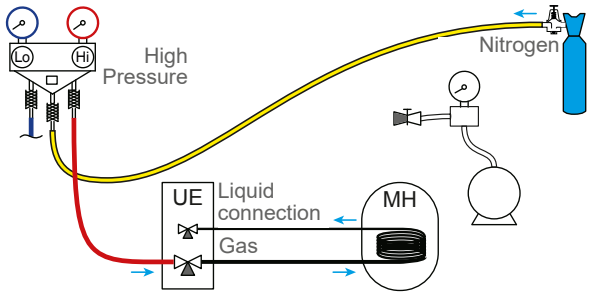

c) Connect the flexible rod to the vacuum pump again, activate it and gradually open the flexible rod valve.

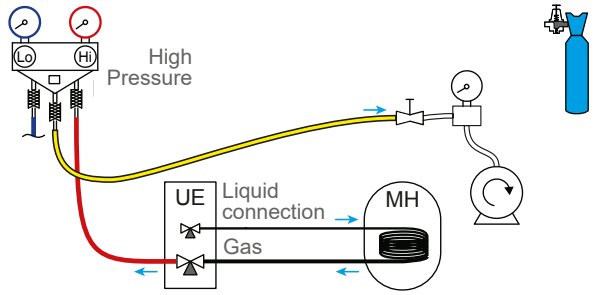

d) Repeat this step at least three times.

<u>Reminder</u>: it is strictly prohibited to carry out these steps with refrigerant.

▼ Leak test

- Remove the protective plug (**B**) from the load inlet (*Schrader*) on the gas valve (large diameter).
- Connect the high-pressure flexible rod of the *Manifold* to the load inlet (*fig. 43*).
- Connect the nitrogen bottle to the *Manifold* (use dehydrated nitrogen type U exclusively).
- Pressurise the nitrogen (10 bar maximum) in the refrigeration circuit (**gas-condenser connection-liquid connection**).
- Leave the circuit under pressure for 30 minutes.

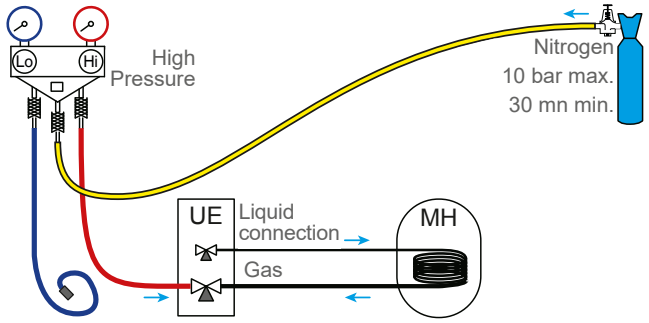

- If the pressure drops, let it go down to 1 bar and look for any leaks with a leak detecting product, repair and do another test.

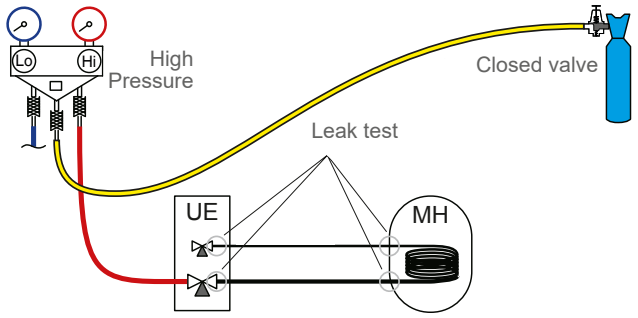

- When the pressure is stable and any leaks are excluded, empty the nitrogen, making sure the pressure is above atmospheric pressure (between 0.2 and 0.4 bar).

▼ Suction evacuation

It is strongly recommended to use the triple vacuum technique (ANNEX 2) for all installations, particularly when the outdoor temperature is below 10°C.

- If required, calibrate the Manifold manometer(s) to 0 bar. Adjust the vacuum gauge to the atmospheric pressure (≈ 1,013 mbar).
- Connect the vacuum pump to the Manifold. Connect a vacuum gauge if the vacuum pump is not equipped.

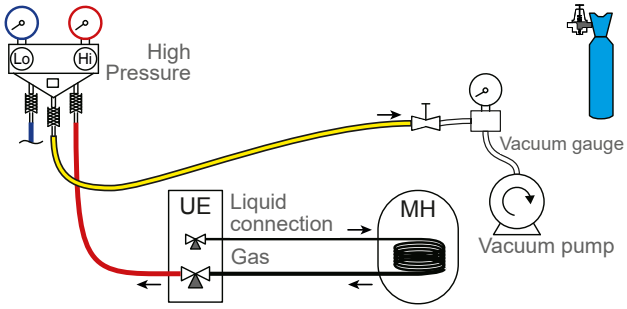

Evacuate the suction until the residual pressure* in the circuit drops under the value indicated in the following table (* measured with the vacuum gauge).

T °C	5°C<T<10°C	10°C<T<15°C	15°C < T
Pmax **- bar** **- mbar**	0.009 9	0.015 15	0.020 20

- Leave the pump in operation for at least another 30 minutes after the required vacuum has been achieved.
- Close the Manifold valve and stop the vacuum pump **without removing any of the flexible rods in place.**

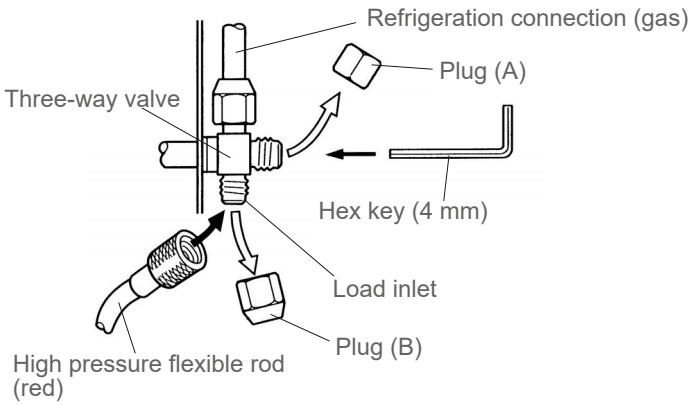

fig. 43 - Connecting the flexible rod to the gas valve

■ Dual hydraulic unit - 1 heating circuit

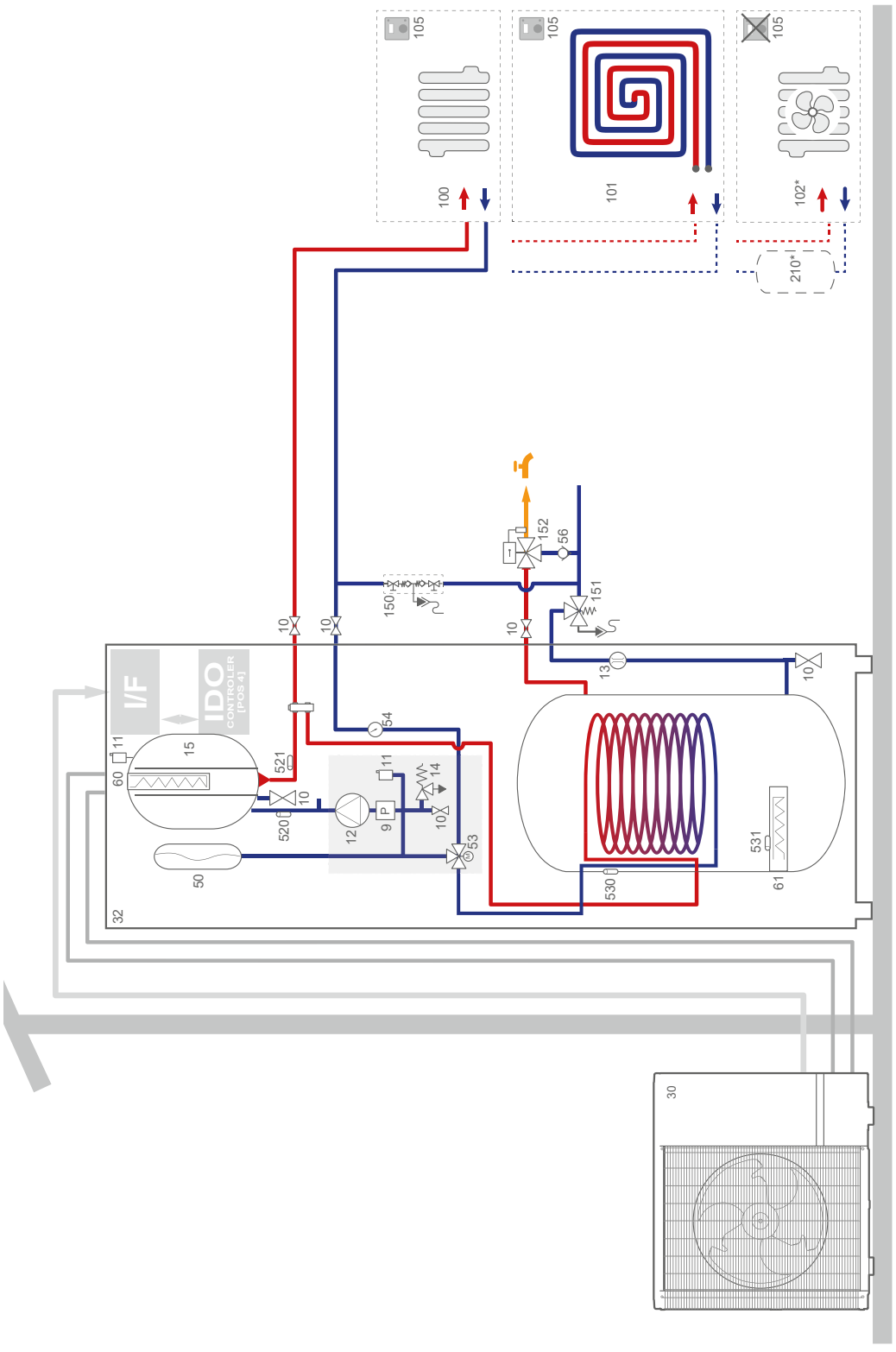

9 - Pressure sensor (Value)
10 - Valve
11 - Drain valves
12 - Circulation pump
13 - Flowmeter
14 - Safety valve
32 - Dual hydraulic unit*
50 - Expansion vessel
52 - Decoupling bottle
53 - Directional valve
56 - Non-return valve
60 - Electrical heating backup
61 - DHW electrical backup
100 - Radiator
101 - Underfloor heating system
102 - Dynamic radiator (fan convector)
105 - Thermostat or room sensor (zone 1)
150 - Backflow preventer
151 - Safety group
152 - Thermostatic mixer
210 - Buffer tank
250 - 2-circuit kit
251 - Combination circuit kit
252 - Mixing valve
520 - Return temperature sensor (heating circuit)
521 - Flow temperature sensor (heating circuit)
530 - DHW temperature sensor
531 - DHW electrical backup safety thermostat
540 - Flow temperature sensor (combination circuit)

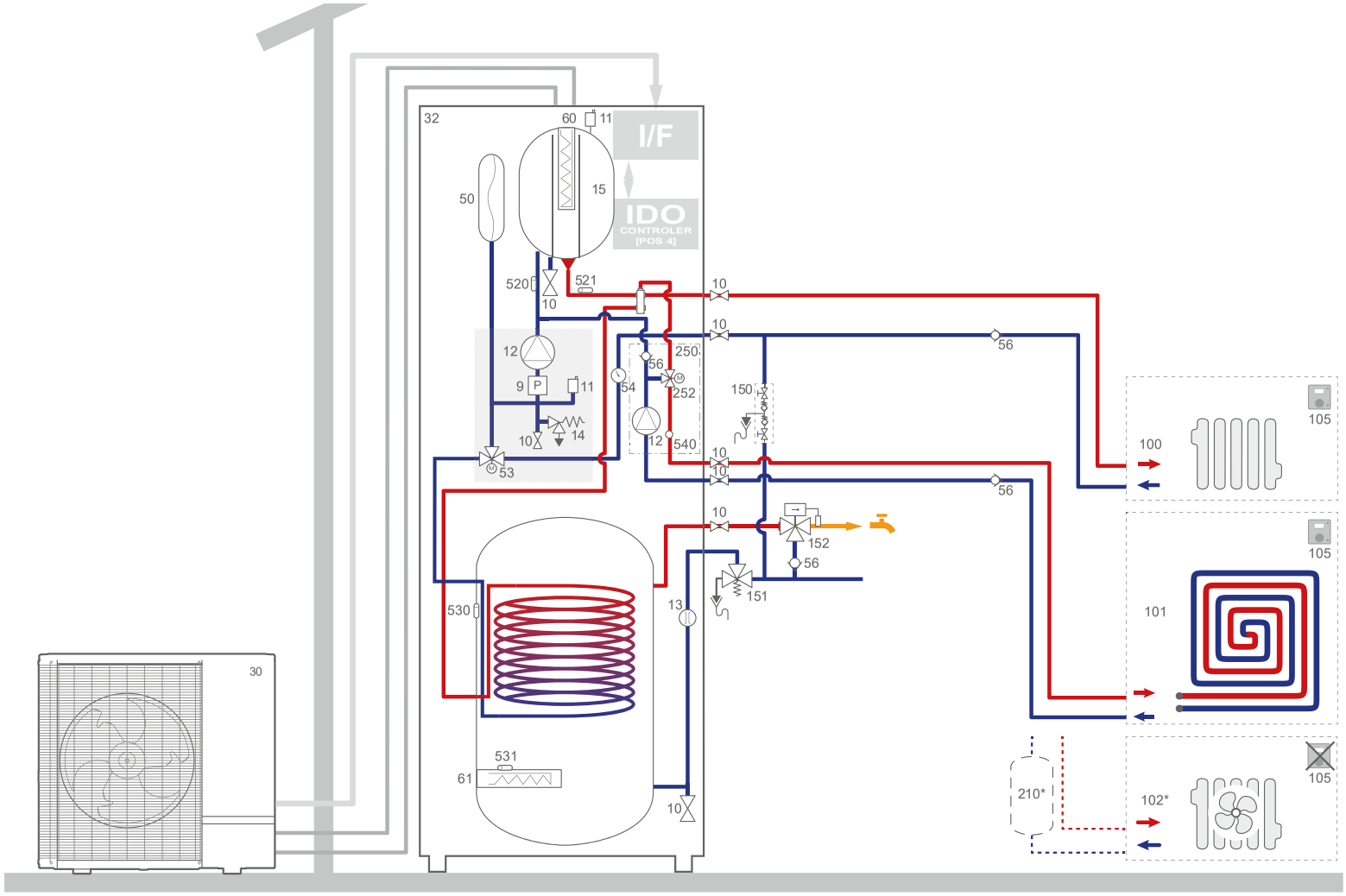

9 - Pressure sensor (Value)
10 - Valve
11 - Drain valves
12 - Circulation pump
13 - Flowmeter
14 - Safety valve
32 - Dual hydraulic unit*
50 - Expansion vessel
52 - Decoupling bottle
53 - Directional valve
56 - Non-return valve
60 - Electrical heating backup
61 - DHW electrical backup
100 - Radiator
101 - Underfloor heating system
102 - Dynamic radiator (fan convector)
105 - Thermostat or room sensor (zone 1)
150 - Backflow preventer
151 - Safety group
152 - Thermostatic mixer
210 - Buffer tank
250 - 2-circuit kit
251 - Combination circuit kit
252 - Mixing valve
520 - Return temperature sensor (heating circuit)
521 - Flow temperature sensor (heating circuit)
530 - DHW temperature sensor
531 - DHW electrical backup safety thermostat
540 - Flow temperature sensor (combination circuit)

▶ Electric wiring diagram

Before any intervention, make sure <u>all power supplies</u> are disconnected.

Stored energy: after cutting off the power supplies, wait 10 minutes before accessing the inside of the equipment.

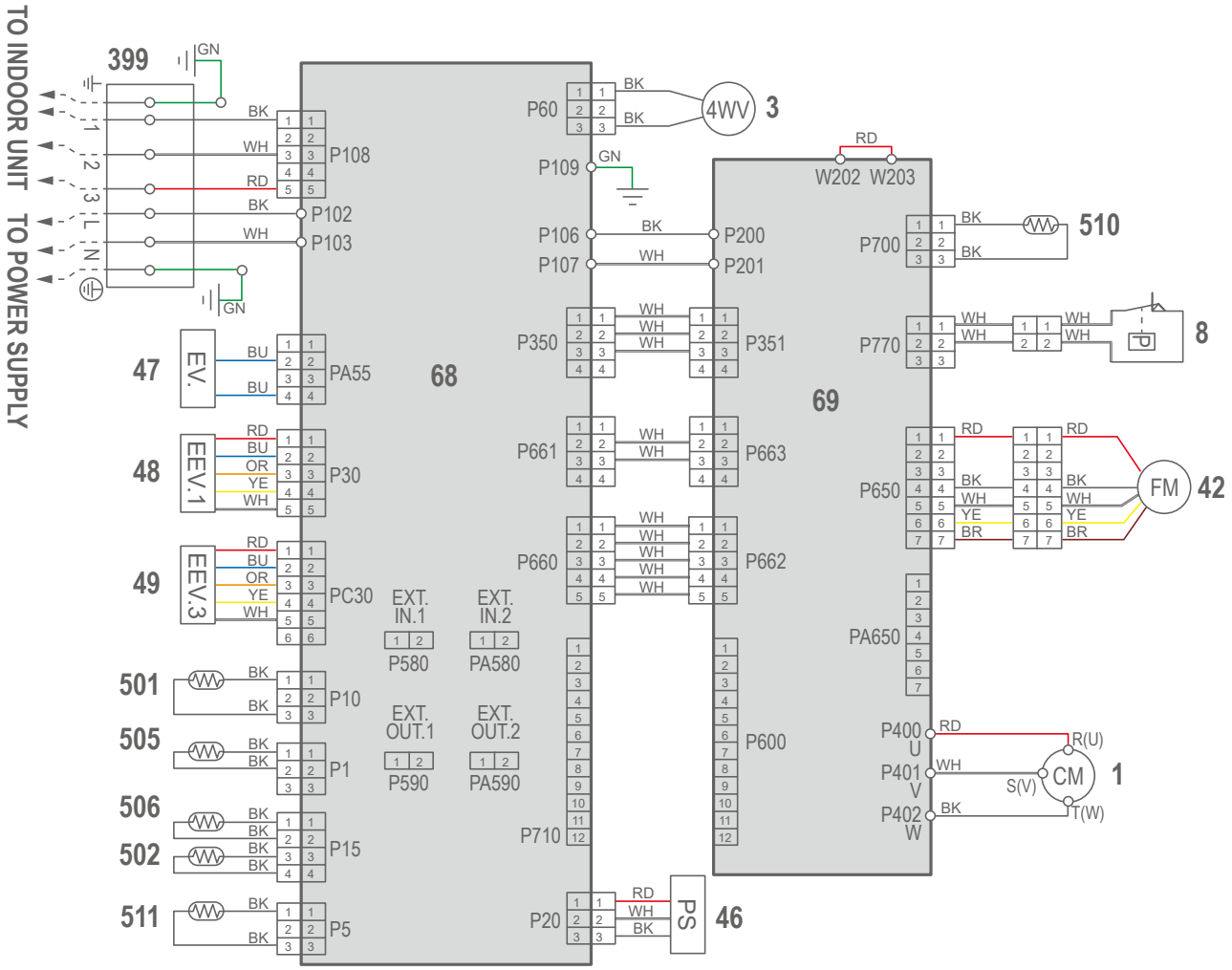

1 - Compressor	**69 -** Inverter board
3 - Four-way valve	**399 -** Terminal block
8 - Pressure sensor (On/Off)	**501 -** Compressor temperature sensor
42 - Fan motor	**502 -** Drain temperature sensor
46 - Pressure sensor (top)	**505 -** Centre temperature sensor (refrigeration exchanger)
47 - Electronic valve (injection)	**506 -** Outlet temperature sensor (refrigeration exchanger)
48 - Electronic reducer (Electronic expansion valve)	**510 -** Temperature sensor Radiator
49 - Electronic reducer (injection)	**511 -** Outside T° sensor
68 - Main board	

fig. 44 - Outdoor unit electrical wiring - Single-phase model

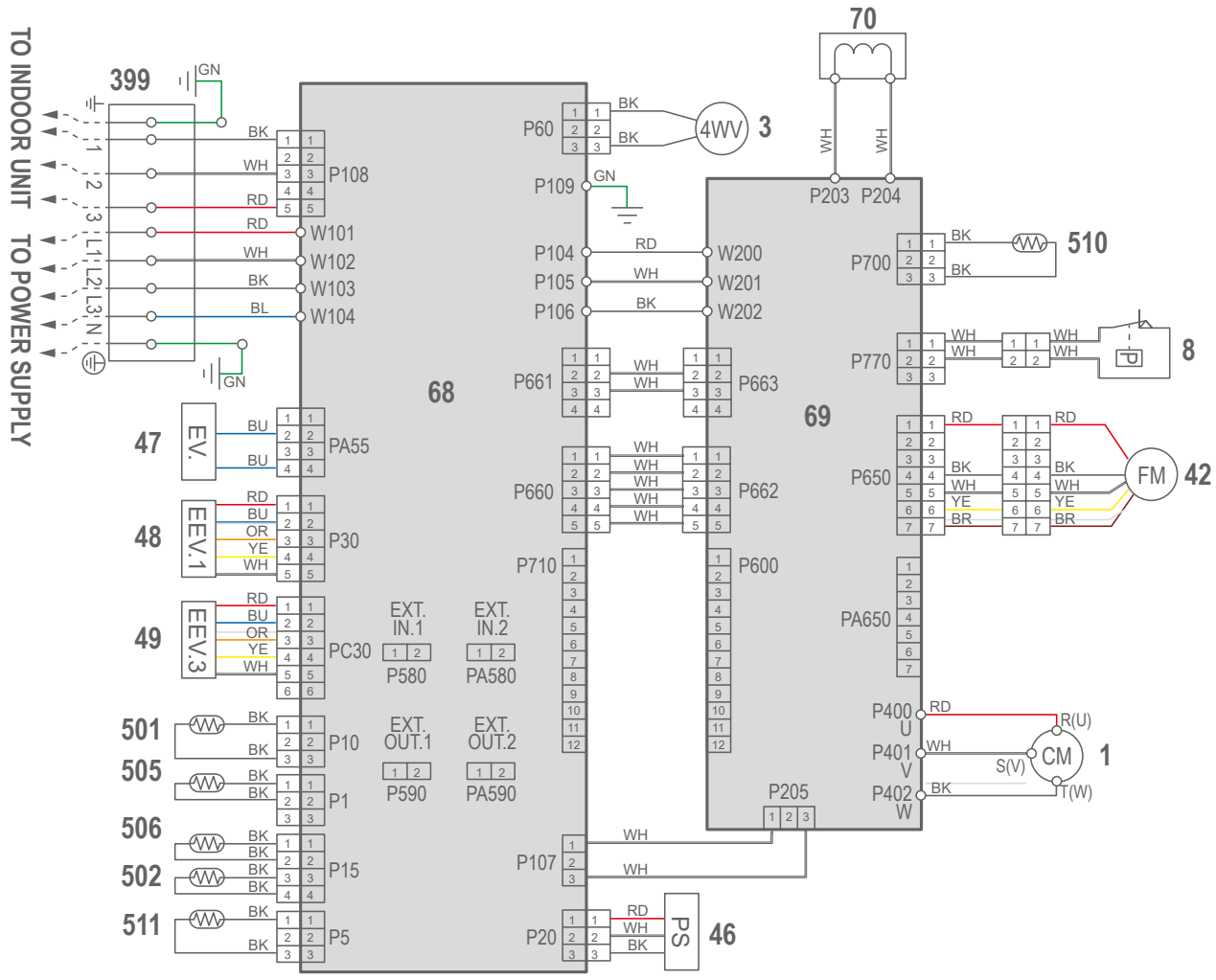

1 - Compressor
3 - Four-way valve
8 - Pressure sensor (On/Off)
42 - Fan motor
46 - Pressure sensor (top)
47 - Electronic valve (injection)
48 - Electronic reducer (Electronic expansion valve)
49 - Electronic reducer (injection)
68 - Main board
69 - Inverter board
70 - Reactance
399 - Terminal block
501 - Compressor temperature sensor
502 - Drain temperature sensor
505 - Centre temperature sensor (refrigeration exchanger)
506 - Outlet temperature sensor (refrigeration exchanger)
510 - Temperature sensor Radiator
511 - Outside T° sensor

fig. 45 - Outdoor unit electrical wiring - Three-phase model

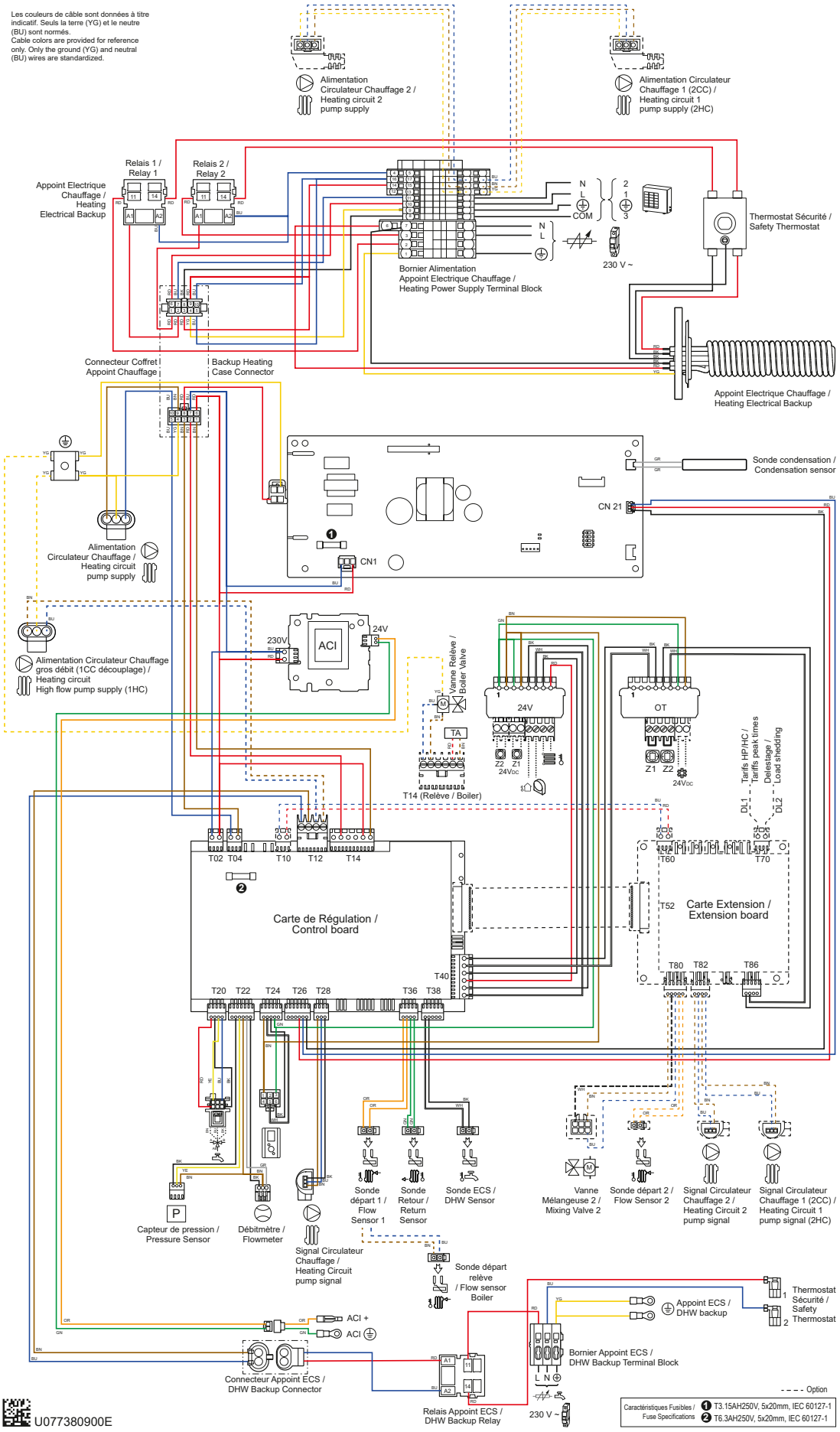

fig. 46 - Hydraulic unit electrical wiring - Single-phase model

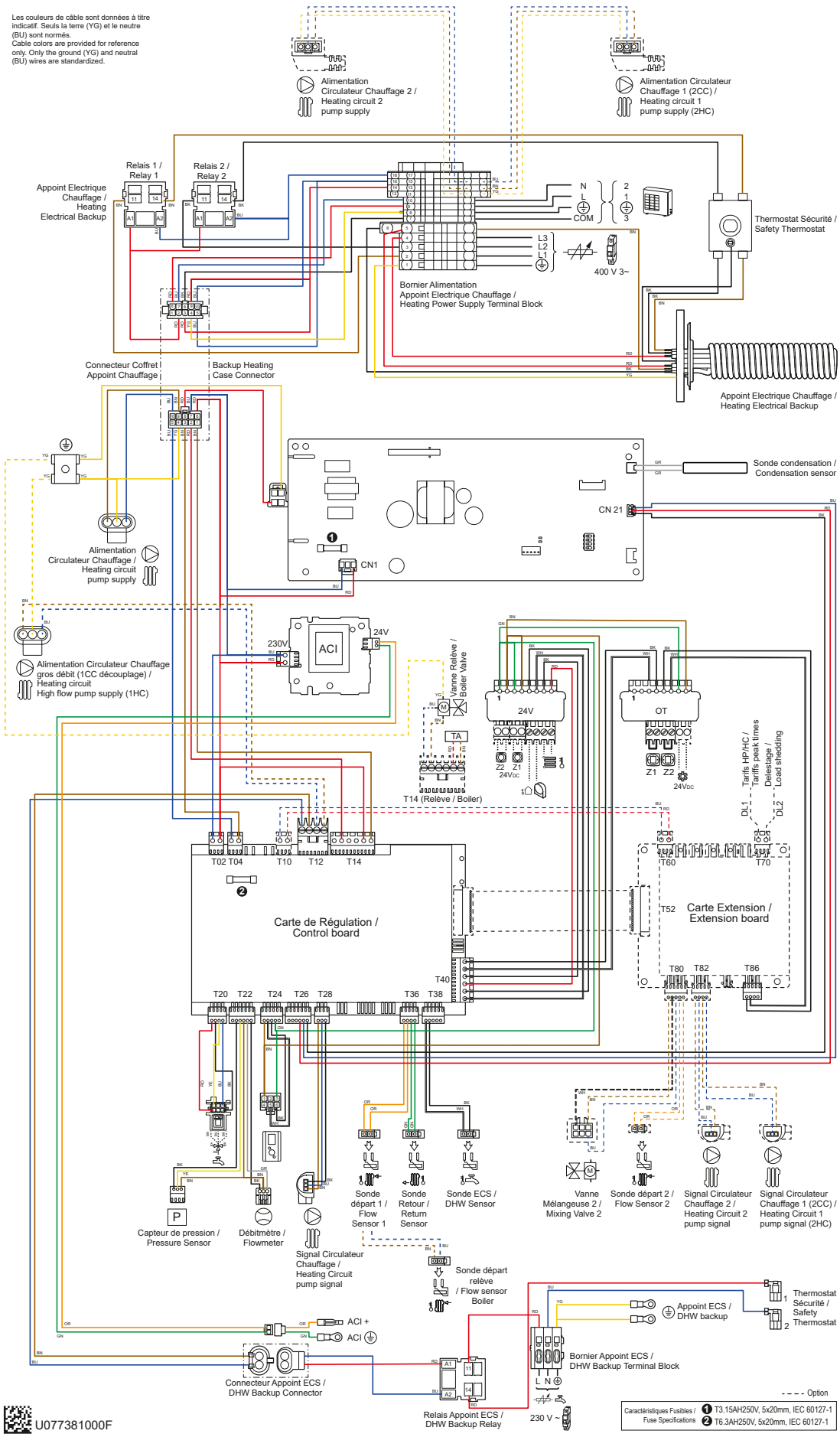

fig. 47 - Hydraulic unit electrical wiring - Three-phase model

☑ Commissioning procedure

Before powering the hydraulic unit:

- Check electrical wiring.
- Check the refrigeration circuit is filled with gas.
- Check the hydraulic circuit pressure (1 to 2 bar), check the heat pump has been purged, as well as the rest of the installation.
- Make sure all DIP switches are OFF before starting.

▶ Commissioning check list

▼ Before start-up

	OK	Non compliant
Implantation (*"Implantation", page 16* **)**		
Room surface, volume and ventilation		
Fixing the hydraulic unit to the ground		
Visual controls of Outdoor unit (view chapter *"Outdoor unit installation", page 17* **)**		
Location and fixing, condensate evacuation.		
Compliance with distances from obstacles.		
Hydraulic controls of Hydraulic unit (*"Installing the hydraulic unit", page 20* **)**		
Connection of pipes, valves and pumps (heating circuit, DHW).		
Installation water volume (check whether the expansion vessel capacity is adapted).		
Check for leaks.		
Pressure of primary network and air purge.		
Connections and refrigeration controls (view chapters *"Refrigeration connections", page 25* **)**		
Control of refrigeration circuits (obturation system ok, check for dust and humidity).		
Connections between units (pipe length, flared connection tightening...).		
Mechanical protection of refrigeration connections		
Installation of HP manometers on gas line (large pipe).		
Evacuate the suction (mandatory).		
Nitrogen leak test (~ 10 bar).		
Open refrigeration valves on the outdoor unit.		
Fill the hydraulic unit and pipes with refrigerant.		
Write down the quantity of gas on the outdoor unit label (factory load + additional filling).		
Electric controls of Outdoor unit (view chapter *"Outdoor unit", page 38* **)**		
General supply (230 V or 400 V).		
Protected by calibrated circuit breaker.		
Cable section.		
Earth connection.		
Hydraulic unit (view chapter *"Hydraulic unit", page 35* **)**		
Connection with the outdoor unit (L, N, Earth or 3L, Earth).		
Connection of the various sensors (location and connections).		
Connection of the directional valves (backup boiler and DHW) and circulation pump.		
Electrical backup power supply and protection.		

▼ Start-up

	OK	Non compliant
Quick commissioning (view chapter *"⚙ Commissioning", page 45*)		
Switch on the installation's main circuit breaker (outdoor unit power supply) 6 hours before the tests => Compressor pre-heating.		
Switch on the circuit breaker => A few seconds initialisation => Easy Start.		
Heat pump circulation pump operation (heating).		
Air purge of heat pump circulation pump (heating).		
Installation purge.		
The outdoor unit starts after 4 minutes.		
Set the Time, Date and Time-Control, if they differ from the default values.		
Set the hydraulic circuit.		
Set the heating curve slope.		
Adjust the maximum flow setpoint.		
Checks on the outdoor unit		
Operation of fan(s) and compressor.		
Current measure.		
After a few minutes, measure of the air T° delta.		
Control of pressure/condensation and evaporation temperature.		
Checks on the hydraulic unit		
After 15 minutes' operation.		
Delta of primary water T°.		
Priority to DHW (switchover of directional valve).		
Operation of heating, backup boiler...		
Room control (view chapters *"Control system interface", page 42* and *"Control system menu", page 47*)		
Setting, handling, checks.		
Program the times for heating periods.		
Set the heating circuit setpoints if they differ from the default values.		
Setpoint display.		

Use instructions		

The heat pump is ready to operate!

▶ Commissioning technical sheet

Location		***Installation engineer***	

Outdoor unit	Serial number		***Hydraulic unit***	Serial number	
	Model			Model	

Type of refrigerant		***Refrigerant load***	kg

Controls				***Outdoor unit operating voltages and currents***			
Compliance with implantation distances				L/N	V		
Adequate condensate evacuation				L/T	V		
Electrical connections/connection clamping				N/T	V		
No GAS leaks (Appliance identification No:)				Icomp	A		
Adequate refrigeration connection installation (length m)							
Reading in HOT operating mode							
Compressor backflow T°		°C					
Liquid line T°		°C					
Condensation T°	HP = bar	°C	}	Subcooling		°C	
Water tank outlet T°		°C	}	Δ of condensation T°		°C	
Water tank inlet T°		°C	}	Δ of secondary T°		°C	
Evaporation T°	BP = bar	°C					
Inlet T°		°C	}	Overheating		°C	
T° of battery air intake		°C	}	Δ of evaporation T°		°C	
T° of battery air outlet		°C	}	Δ of battery T°		°C	

Hydraulic network on hydraulic unit						
Secondary network	Underfloor heating system / ceiling heating		}	Circulation pump brand	Type	
	LT radiators					
	Fan coils					
Domestic hot water; type of water tank						
Estimate of secondary network water volume		L				

Options & accessories					
Electrical backup power					
Adequate room sensor location					
2-circuit kit					
Backup boiler kit			Details		

Control settings			
Type of configuration			
Essential settings			

Instructions for the user

Explain to the user how the installation works, particularly the room sensor features and the programmes which can be accessed from the user interface.

Insist on the fact that an underfloor heating / ceiling heating system has a great thermal inertia, meaning adjustments must be made gradually.

Also provide explanations to the user on how to check the heating circuit filling.

Appliance end-of-life

Appliance dismantling and recycling must be done by a specialised unit. Appliances must never be disposed of with household waste, bulky waste or in a landfill.

When the appliance has reached its end-of-life, please contact the installation engineer or local representative to dismantle and recycle the appliance.









atlantic

AMBB - SATC
Rue des fondeurs 59660 Merville - France
www.atlantic-comfort.com

Commissioning date:

Address of your heating installer or customer service.

These products comply with the following directives:

Outdoor Unit
- Low Voltage Directive 2014/35/EU
- Electromagnetic Compatibility Directive 2014/30/EU
- Machinery Directive 2006/42/EC
- Pressure Equipment Directive 2014/68/EU

Hydraulic Module
- Radio Equipment Directive 2014/53/EU

Outdoor Unit and Hydraulic Module
- Directive 2011/65/EU and applicable delegated directives on the restriction of the use of certain hazardous substances in electrical and electronic Equipment
- Ecodesign Directive 2009/125/EC and applicable implementing régulations
- Regulation (EU) 2017/1369 setting a framework for energy labeling and applicable delegated régulations

The full text of the EU Declaration of Conformity is available at the following internet address: https://www.atlantic.fr/

This appliance is identified by this symbol. It means all electrical and electronic goods must imperatively be separated from household waste.
A specific recovery circuit for this type of product is in place in European Union countries (*), Norway, Iceland and Liechtenstein.
Do not try dismantling the product yourself. It may harm your health as well as the environment.
The refrigerant, oil and other parts must be reprocessed by a qualified installation engineer in accordance with applicable local and national legislations.
To be recycled, this appliance must be collected by a specialised unit and must in no circumstance be disposed of with household waste, bulky waste or in a landfill.
Please contact your installation engineer or local representative for further information.

* Depending on each member state's national regulations.

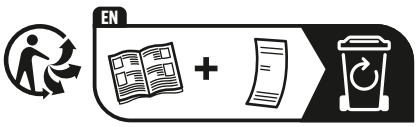

Equipment subject to change without notice - Document is non contractual